TOSHIBA

FILE NO. 110-9806

3

SERVICE MANUAL

VIDEO CASSETTE RECORDER

V-728B

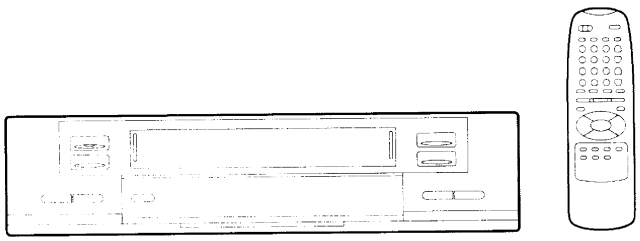

PRINTED IN JAPAN, May, 1998 Ⓢ

CONTENTS

SECTION 1
GENERAL DESCRIPTIONS

OPERATING INSTRUCTIONS ..... 1-1 to 1-17

SECTION 2
ADJUSTMENT PROCEDURES

1. MECHANICAL ADJUSTMENT 2-1
1-1. Mechanical Parts Location 2-1
1-2. Servicing Jig List 2-2
1-3. Main Parts Servicing Time 2-3
1-4. V3 Mechanism Check Method 2-4
1-5. Mechanical Deck Removal and Mounting 2-7
1-6. Main Parts Replacement 2-9
1-7. Check and Adjustment 2-34
2. ELECTRICAL ADJUSTMENT 2-43
2-1. Servo Circuit 2-45
2-2. Self Diagnosis Function 2-47

SECTION 3
SERVICING DIAGRAMS

1. INSPECTION PROCEDURE 3-1
2. REMOVAL OF CABINET 3-2
3. ELECTRICAL UNITS LOCATION DIAGRAM 3-2
4. STANDING PC BOARDS FOR SERVICING 3-2
5. PART SYMBOLS 3-3
5-1. Precautions for Part Replacement 3-3
5-2. Solid Resistor Indication 3-3
5-3. Capacitance Indication 3-3
5-4. Inductor Indication 3-4
5-5. Waveform and voltage Measurement 3-4
6. PRINTED WIRING BOARD AND SCHEMATIC DIAGRAM 3-5
7. BLOCK DIAGRAMS 3-7
7-1. Power Block Diagram 3-7
7-2. PIF Block Diagram 3-8
7-3. KDB Block Diagram 3-9
7-4. Servo/Logic Block Diagram 3-13
7-5. Video Block Diagram 3-20
7-6. Conventional Audio Block Diagram 3-23
7-7. Hi-Fi Audio Block Diagram 3-26
8. CIRCUIT DIAGRAMS 3-30
8-1. Power Circuit Diagram 3-30
8-2. PIF Circuit Diagram 3-33
8-3. KDB Circuit Diagram 3-36
8-4. Servo/Logic Circuit Diagram 3-39
8-5. Video Circuit Diagram 3-44
8-6. Conventional Audio Circuit Diagram 3-49
8-7. Terminal/Audio Circuit Diagram 3-51
9. PC BOARDS 3-54
9-1. Main PC Board 3-54
9-2. Terminal/Audio PC Board 3-57
9-3. KDB PC Board 3-59
9-4. FCB PC Board 3-59

SECTION 4
PARTS LIST

1. SAFETY PRECAUTION 4-1
2. NOTICE 4-1
3. ABBREVIATIONS 4-1
3-1. Integrated Circuit (IC) 4-1
3-2. Capacitor (Cap) 4-1
3-3. Resistor (Res) 4-1
4. EXPLODED VIEWS 4-2
4-1. Packing Assembly 4-2
4-2. Remote Control Unit 4-2
4-3. Cabinet Assembly 4-2
4-4. Chassis Assembly 4-3
4-5. Mechanism Assembly (1) 4-4
4-6. Mechanism Assembly (2) 4-5
5. PARTS LIST 4-6

SECTION 1
GENERAL DESCRIPTIONS

OPERATING INSTRUCTIONS

1 3 INTRODUCTION IDENTIFICATION OF CONTROLS

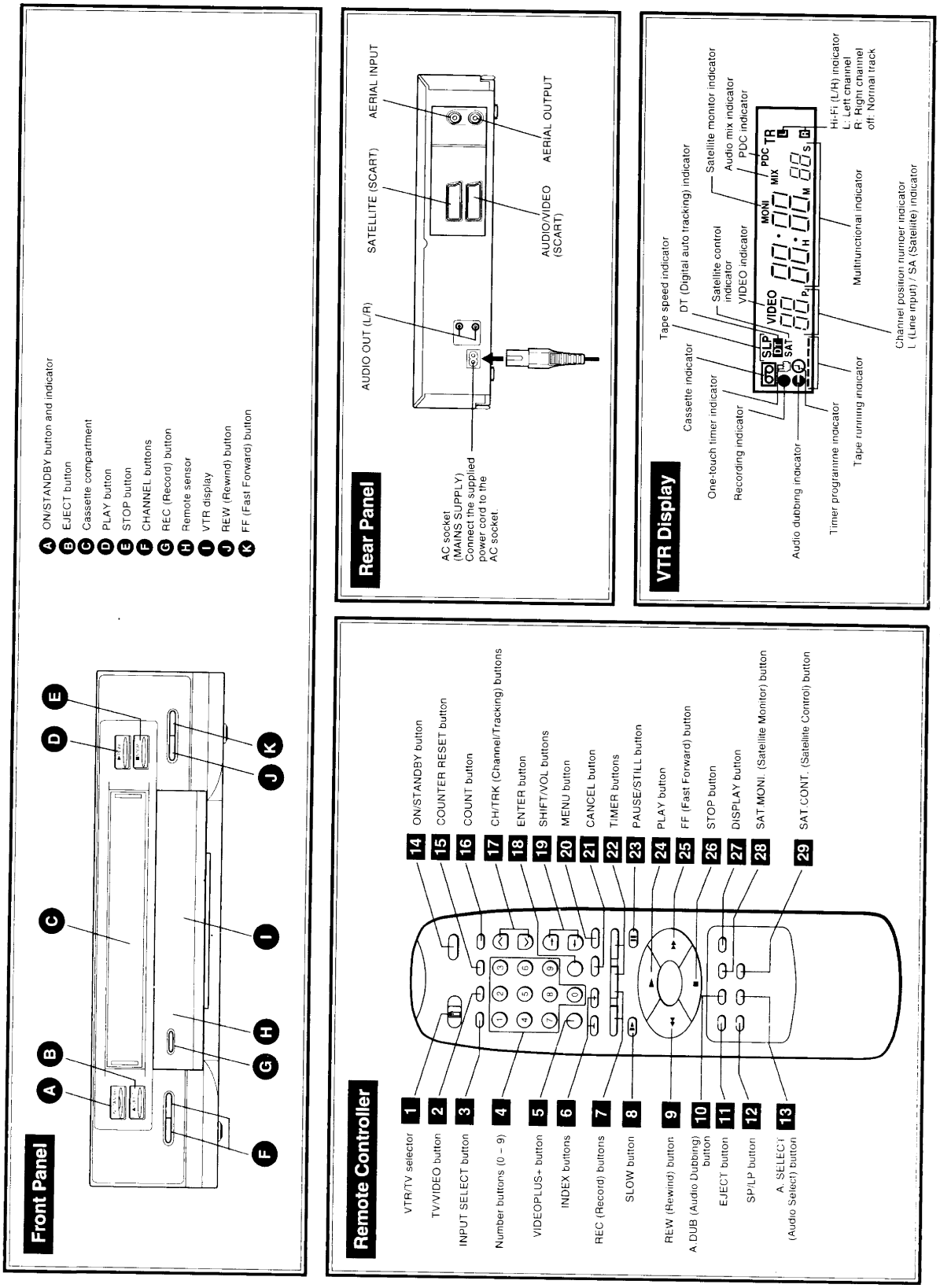

AUTO SET UP

The Auto Set Up function automatically tunes in TV stations, sets the clock and sets the RF out channel. All you have to do is to connect the VTR to the main antenna aerial and your TV, and then plug the power cord into the mains outlet.

Auto Set Up

1 Connect the VTR to your TV with an aerial cable from the main antenna.

To receive TV stations only

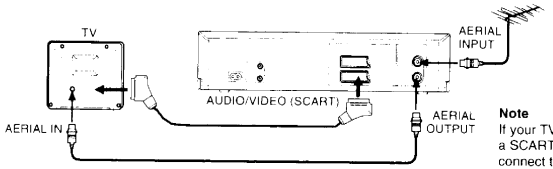

Note
If your TV has a SCART socket, use a SCART cable (not supplied) to connect the VTR.

To receive satellite channels as well

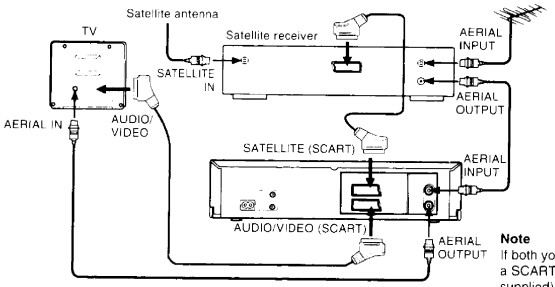

Note
If both your TV and satellite receiver have a SCART socket, use a SCART cable (not supplied) to connect the VTR.

Turn on the satellite receiver and tune to SKY ONE.

2 Plug in the VTR to start its Auto Set Up.
The display will flash "AUTO" for a few minutes.

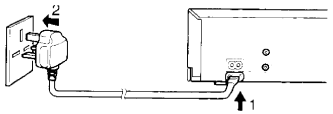

VTR display

The Auto Set Up is being carried out.

3 When the VTR completed Auto Set Up, there are 3 possibilities:

a) All Channels Found (Ch 1~Ch 7)
b) Some Channels Found
c) No Channel Found

Notes
- The Auto Set Up procedure above is available only on the first time you connect this VTR. See pages beginning from 36 for the next time.
- If you press the CANCEL button, the Auto Set Up is cancelled.
- If the VTR display shows "0:00" after flashing, no stations are stored. Make sure that the VTR and the TV are connected correctly, and perform "MANUAL SET UP" (page 36) to store your stations and set the clock.
- The TV stations in tuning range numbers 2 and 3 are not stored automatically in this procedure. To receive these stations, you must store them manually. See "Manual Storing of TV Stations" on page 37.

All Channel Found

The screen below will appear when all channels are found.

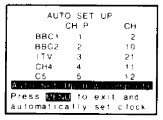

1) VTR will perform auto RF modulator preset and the smallest valid blank RF channel will be displayed on the VTR display. (The valid RF Out channel is between 21 and 69.)
2) The RF out channel can be changed by pressing the **SHIFT** buttons. 19
3) Press **MENU** button to exit to auto clock set mode. 20
4) When the auto set up is completed, the display will show the time, e.g. "14:30".
5) Press **MENU** to exit. 20

Some Channel Found

The screen below will appear when only some channels are found.

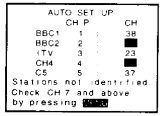

1) The RF out channel can be changed by pressing the **SHIFT** buttons. 19
2) Press **MENU** button to exit to channel swapping page. (For details, see page 12.) 20

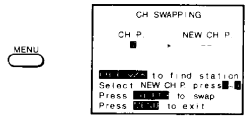

3) Press **MENU** button to exit to auto clock set upon completion of channel swapping. 20
4) Auto clock set can only be performed if BBC1 is set, else manual clock set is needed.
5) Press **MENU** to exit. 20

No Channel Found

The screen below will be displayed if no valid signal is detected.

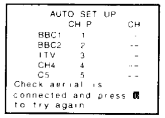

Note
This screen is likely to appear if the aerial is not connected correctly. Make sure that the VTR and the TV are connected correctly.

1) The RF out channel can be changed by pressing the **SHIFT** buttons. 19
2) Press **number button 0** to retry the auto set up full scanning for stations. 4
3) If no channel found again the screen below will appear.

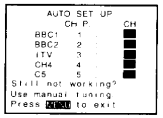

4) Perform "MANUAL SET UP" (page 36) to store your stations and set the clock.
5) Press **MENU** button to exit. 20

WATCHING THE VIDEO PICTURE

The way you operate this VTR to watch a video picture depends on whether you use a SCART cable or not.

For SCART Cable Users

■ **To watch a video picture from the VTR**
Insert a cassette and press the **PLAY** button on the remote controller or front panel of the VTR. 24 D

■ **To watch or record a programme from the connected satellite receiver**
Press the **INPUT SELECT** button so that "SA" indicator appears in the VTR display. (See page 34.) 3

For Non-SCART Cable Users (Setting the Video Channel)

The VTR signals are sent to your TV from the AERIAL OUTPUT socket. Your TV must have a channel set aside exclusively for these VTR signals. This is called the video channel.

Preparation
Set the VTR/TV selector to "VTR". 1

1 Turn on the TV.

2 Select a free channel on the TV which you wish to use for your video picture, for example channel 9.
This channel 9 will be only used for watching a video picture.

3 Press the **ON/STANDBY** button to turn on the VTR. 14 A

4 Hold down the **MENU** button **for more than 5 seconds**. 20

VTR display
VIDEO

This is a case where the Auto Set Up has selected channel 21 as the RF out channel that transmits the VTR signal to the TV.

5 Tune the TV (on channel 9 for example in step *2*) so that the following screen is shown clearly. (For tuning the TV, refer to the TV's manual.)

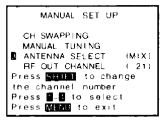

6 Press the **MENU** button. 20
Video channel setting is complete.

Note on the RF Out Channel

If you want to change the RF out channel after tuning, press the **SHIFT** buttons in step *5* to select the desired channel number. 19
The number changes in the VTR display as follows.

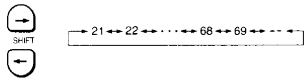

After selecting the number, re-tune the TV and confirm the screen is shown clearly.

You can change the RF out channel also while the MANUAL SET UP screen is displayed (ex. in step *4* on page 11).
Press **number button 4** to select "RF OUT CHANNEL", and change the number following the above procedure. 4

- If the VTR display shows " – – " in step *4*, there is no RF out channel selected by Auto Set Up. Connect the VTR to your TV using the SCART cable.

Note on the Antenna Output

On the screen in step *5* in "Setting the Video Channel", the antenna output can be set to "MIX" or "SW". (Applied when the VTR is connected to your TV only via the AERIAL OUTPUT socket.)
Press **number button 3** to select "MIX" or "SW". 4

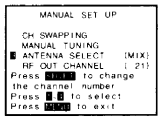

MIX: You can watch a video picture on the video channel regardless of whether or not you have pressed the TV/VIDEO button.
The switch should only be set to "SW" if the video pictures or TV pictures cannot be obtained clearly.

SW: You can watch a video picture on the video channel only when the "VIDEO" indicator is lit in the VTR display by pressing the TV/VIDEO button. 2

CHECKING AUTO SET UP / CHANNEL SWAPPING

This section explains how to check if the TV stations are stored on the VTR correctly. If they are not stored correctly, you must enter them manually. (See page 37.)

Checking Auto Set Up

Using the **CH/TRK** buttons on the VTR's remote controller, check that the order of the TV stations stored on the VTR is as below. (This is important for the correct functioning of Video Plus+ DELUXE.) 17

Position number	TV station
1	BBC1
2	BBC2
3	ITV
4	CHANNEL 4
5	CHANNEL 5
6	Satellite receiver

Position number 6 is reserved for a satellite receiver connected with an aerial cable. This position will be empty if there is no satellite receiver connected.

Any other stations are stored from position number 7 onward. If one of these has a better picture or is your preferred regional station, (e.g. Carlton instead of Meridian) then you can swap this into another position number. See the procedure below.

Channel Swapping

This VTR can move a TV station stored by Auto Set Up to another position number. This is called "Channel Swapping".

To move a TV station stored on position number 7 to position number 3.

1 Select position number 7 with the **CH/TRK** buttons. 17

VTR display

2 Press the **MENU** button. 20
The MAIN MENU screen appears.

3 Press **number button 3** to select "INSTALLATION". 4

4 Press **number button 2** to select "MANUAL SET UP". 4

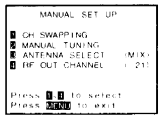

5 Press **number button 1**. 4
The following text will be superimposed over the position number you selected.

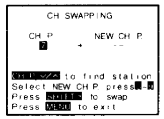

6 Press **number button 0** and **3** to select a new position number, then press the **SHIFT**(→) button. 4 19

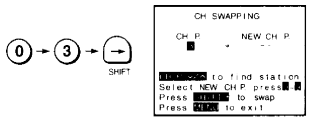

7 To select another stored station to move, press the **CH/TRK** buttons and follow step *6*. 17

8 Press the **MENU** button. 20
Now Channel Swapping is complete.
Further press the **MENU** button three times to return to the normal TV screen.

3 1 BASIC OPERATION
ON SCREEN DISPLAY / VIDEO CASSETTE USE

This is basic information for the playback operation.

Displays and Indicators on the Screen

Pressing the **DISPLAY** button makes the operating mode appear. If you press this button again, the indication goes off, leaving the counter indication on the screen. To turn it off, press the **DISPLAY** button once more. 27

Counter indication
- Linear time counter
- Tape time remaining
- Clock

Each time the **COUNT** button is pressed, the indication changes. 16
(For details, see page 20.)

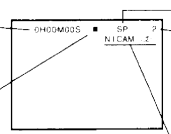

Tape speed (SP/LP/SLP)

Position number

The indicator varies with the operating mode.

Ejecting a tape	⏏
Stop	■
Fast-forwarding Forward picture search	▶▶
Rewinding Reverse picture search	◀◀
Recording	●
Recording pause	❚❚●
Playback	▶
Still picture Frame advance	❚❚
Slow playback	❚▶

The indication varies with the receiving NICAM	
TV programme	NICAM broadcast
STEREO TV programme (stereo sound)	N I CAM ⊂⊃
BILINGUAL TV programme (transmitted in another language)	N I CAM I/II
NO NICAM programme or Normal TV programme (Monaural sound)	not lit

Note
In addition to the indication above, the VTR may display other indicators such as index search. See respective pages for each explanation.

Video Cassette Use

■ **Loading a Cassette**
Push the cassette into the cassette compartment with the window side facing up and the label side towards the front. The VTR is automatically turned on. The ⊂⊃ indicator will appear in the VTR display. C

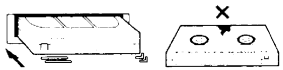

■ **Ejecting a Cassette**
Press the **EJECT** button. The cassette is ejected from the cassette compartment. 11

Warning
Do not insert your hands or any foreign objects into the compartment. This may result in injury or damage. Take special care with children to avoid accidents.

Precautions When Using Cassettes

Video cassettes have a safety tab to prevent accidental erasure. If the tab has been removed, recording cannot be performed.

■ **To prevent accidental erasure**
Remove this safety tab with a screwdriver.

■ **To record again**
Cover the tab hole with adhesive tape.

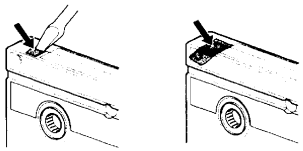

- Avoid exposing cassettes to direct sunlight. Keep them away from heaters.
  Avoid extreme humidity, vibrations or shock, strong magnetic fields (near a motor, transformer or magnet) and dusty places.

3 2 BASIC OPERATION
PLAYBACK

This section explains the basic playback operation.

Playback

Preparation
- Select the video channel or video input mode on the TV.
- Set the VTR/TV selector to "VTR". 1

1 Load a recorded cassette. Power is turned on. If the cassette has no safety tab, playback starts automatically. C

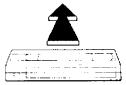

2 Press the **PLAY** button to start playback. 24 D

3 To stop playback, press the **STOP** button. 26 E

Playback and recording with the LP tape speed
When playing back a tape that has been recorded on another VTR, it may happen that the picture colour disappears, the picture becomes unstable and that noise occurs. It is therefore recommended that tapes that have been recorded on this VTR also are played back on this VTR.

Note
TVs connected via SCART cables normally select the video input mode automatically when the PLAY button is pressed.

Rewinding / Fast-forwarding

To rewind or fast-forward the tape, press the **REW** or **FF** button in the stop mode as follows. 9 25

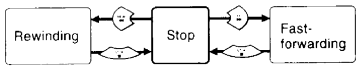

You can view pictures at various tape speeds. See page 22.

■ **Digital Auto Tracking**
When playback starts, the VTR automatically adjusts the tracking for clear pictures and sound. The "DT" indicator blinks during the adjusting.

Notes
- During the adjusting, the playback picture and sound may be distorted.
- The digital auto tracking is activated only in the playback mode.

■ **Adjusting the tracking manually**
If the VTR cannot locate the best possible tracking point, hold down one of the **CH/TRK** buttons until you obtain the best possible picture and sound. 17

Notes
- To reset the tracking point to the center, press both the CH/TRK buttons simultaneously. 17
- To resume the digital auto tracking, hold down both the CHANNEL buttons on the VTR simultaneously for about 2 seconds. F
- The noise on the screen may not be completely eliminated depending on the tape used, especially when the tape was recorded on another VTR.

RECORDING

This section explains the basic recording operation. To record satellite programmes, see "SATELLITE" on pages 32 to 35.

Recording a TV Programme

Preparation
- Turn on the VTR.
- Select the video channel or video input mode on the TV.
- Set the VTR/TV selector to "VTR" 1

1 Load a cassette with the safety tab attached. C

2 Press the **TV/VIDEO** button so that the "VIDEO" indicator appears in the VTR display. 2

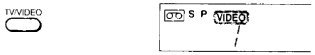

3 Select the TV programme (position number) to record with the **CHANNEL** buttons on the VTR, or the **CH/TRK** buttons or **number buttons** on the remote controller. F 17 4

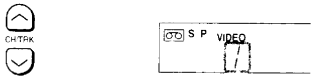

If "L" or "SA" is displayed in the VTR display, press the **INPUT SELECT** button so that the position number appears. 3

4 Press the **SP/LP** button to select the recording tape speed. 12

SP: Suitable for general recording with better picture and sound quality.
LP: Suitable for doubling recording time, but with less picture and sound quality than using the SP tape speed.

5 Press the **REC** button on the VTR, or simultaneously press the two **REC** buttons on the remote controller. G 7
Recording starts.

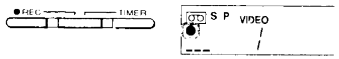

6 Press the **STOP** button to stop recording. 26 E

One-touch Timer Recording

While recording, you can set the off time. G
Press the **REC** button on the VTR to set the off time. Each time you press the button, it changes the VTR display as follows:

Example

Press REC	Recording off time
once	the next hour or half hour
twice	1 hour
three times	1 hour 30 min.
⋮	⋮
eight times	4 hours
nine times	One-touch Timer Recording cancelled (–:– –)

By setting the recording off time, the recording stops and the VTR is turned off automatically.

Notes
- To cancel the one-touch timer recording in progress, press the STOP button. E
- To delay the recording off time, further press the REC button on the VTR. G
- If the VTR clock is not set, the one-touch timer recording will not activate.

Watching a TV Programme While Recording Another

1) While recording, press the **TV/VIDEO** button so that the "VIDEO" indicator displayed disappears in the VTR display. 2

2) Choose another channel using the channel selector on the TV.

Note
To monitor the programme which is being recorded, press the TV/VIDEO button so that the "VIDEO" indicator will appear in the VTR display. Select the video channel or video input mode on the TV. 2

Skipping Unwanted Parts While Recording

Press the **PAUSE/STILL** button to stop recording momentarily. To resume recording, press the **PAUSE/STILL** button again. 23

Note
The VTR automatically shifts to the stop mode if the recording pause mode continues for 10 minutes.

Video Plus+ DELUXE RECORDING

You can easily programme a recording simply by entering the PlusCode. The numbers are published in the TV listings of newspapers, TV guide magazine, etc.

Video Plus+ DELUXE Recording

Preparation
- Turn on the VTR.
- Select the video channel or video input mode on the TV.
- Set the VTR/TV selector to "VTR". 1
- Make sure that the clock is set correctly.
- Make sure that the TV stations have been stored properly (page 12).

1 Press the **VIDEOPLUS+** button. 5
The VTR enters the Video Plus+ DELUXE mode.

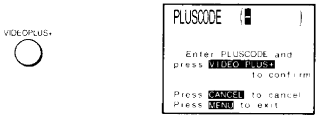

2 Enter the PlusCode.
Example: To record a TV programme beginning at 21:30 on August 30, 1998 with PlusCode 22837 (fiction).

Press **number button 2, 2, 8, 3** and **7.** 4
Confirm that the entered number is correct.

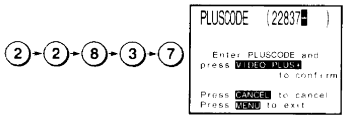

- To correct the number, clear all digits by pressing the **CANCEL** button and re-enter a number. 21

3 Press the **VIDEOPLUS+** button. 5
The TV screen changes as follows:

ONCE: One-time recording.
DAILY (MO-FR): Records TV programmes on the same TV channel at the same time Monday through Friday.
WEEKLY: Records TV programmes on the same TV channel at the same time on the same day every week.

4 To select "ONCE" for example, press **number button 1**. The "ONCE" programming has been made automatically. 4
Programme details are shown.

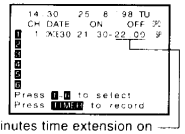

Ex. If you set 10 minutes time extension on the USER SETTING screen (see below), "OFF" displays 22:10.

5 To set PDC, move forward to "PDC" by the **SHIFT**(→) button, and press **number button 1**: if not set, press **number button 2**. 19 4

Note
If you have set the VTR to the satellite receiver control mode (SA displayed), PDC cannot be set.

6 To change the tape speed, press the **SP/LP** button. (For "AUTO", see page 19.) 12

7 Press the **VIDEOPLUS+** button. 5
The programme setting is now memorized.
Note
If you set PDC in set *6*, "AUTO" cannot be chosen. Use either PDC or AUTO tape speed.

8 To enter another PlusCode, repeat steps *2* to *7*.

9 Finally press the two **TIMER** buttons simultaneously. The VTR enters the timer standby mode and the ⏲ indicator lights up. 22

Setting Time Extension

Before making a Video Plus+ DELUXE recording, set possible time extension for the recording to allow for programme's overrun. You can extend the recording time in 10 minute increments up to 60 minutes.

1) Press the **MENU** button to display the MAIN MENU screen. 20

2) Press **number button 2** to select "USER SETTING". 4

3) Press **SHIFT** (→) button to go to page 2/2 of USER SETTING and then press **number button 3** repeatedly to set desired time extension. 19 4

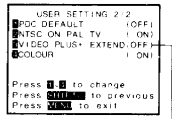

OFF ← 60 ← 50 ← 40 ← 30 ← 20 ← 10

4) Press the **MENU** button twice to exit. 20

Notes
- Extend time should be set before starting Video Plus+ DELUXE recording procedure.
  The time extending doesn't work on recording programmes already memorized.
- When you do not use time extension for Video Plus+ DELUXE recording, set to "OFF" on the USER SETTING screen.

Confirming the Video Plus+ DELUXE Timer Programme

■ **Before the VTR enters the timer standby mode (⏲ indicator not lit)**

1) Press the **MENU** button to display the MAIN MENU screen. **20**

2) Press **number button 1** to select "TIMER PROGRAMMING". **4**

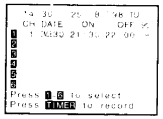

Check the programmed data.

3) Press the **MENU** button twice to exit. **20**

■ **During the timer programme recording (⏲ indicator lit)**

Press the **MENU** button. **20**
The screen for confirming appears.

After about 30 seconds, the screen disappears.

Cancelling the Video Plus+ DELUXE Timer Programme

1) If the ⏲ indicator is lit, press the two **TIMER** buttons to turn it off, and turn on the VTR by pressing the **ON/STANDBY**. **22** **14**

2) Press the **MENU** button to display the MAIN MENU screen. **20**

3) Press **number button 1** to select "TIMER PROGRAMMING". **4**

4) Select a program number which you want to cancel by using **number buttons**. **4**

5) Press the **CANCEL** button. **21**
The line is cleared out.

6) Press the **MENU** button. **20**

Recording or Playback in the Timer Standby Mode

First press the two **TIMER** buttons to release the timer standby mode, and then press the **ON/STANDBY** button to turn on the VTR. The VTR will be available for use. **22** **14**

- Be sure to press the two **TIMER** buttons again to return the VTR to the timer standby mode after you operate. **22**

If a Power Failure Occurs During the Timer Programme Recording

- If the ⏲ indicator is missing in the VTR display after the power failure, the programmed contents have been cleared. Reset the timer programming.
- When power has failed for a short time, the colon of the current time display blinks. The programmed contents are not affected. Reset the clock.

Error Indicators

When the "Full (Clear prog?)" message appears on the TV during programming, no more programmes can be entered. If you want to add another programme, select one existing programme on the screen by using number buttons, and press the CANCEL button to delete it.

If impossible PlusCode is entered, "Invalid code entered" blinks on the screen to tell you that the recording cannot be performed. Press the CANCEL button to clear the PlusCode and enter correct one.

If "Clash" message appears on the screen during programming, it tells you that two programmes with the same recording start time have been entered. You have to make a correction. On this screen, blinking item number means that the item has been entered later.

1) Enter the number of the programme you want to correct using **number buttons**.

2) Correct the timer programme data, or clear the data by pressing the **CANCEL** button and then press the **VIDEOPLUS+** button to enter the PlusCode.

Overlaps of the programmes

If two programmes overlap, the recording start time of programme 2 has a priority over the recording end time of programme 1.

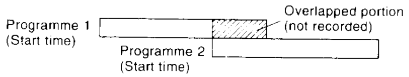

TIMER PROGRAMME RECORDING

The programmable timer allows you to record up to 6 different programmes over one month.

Timer Programming Procedure

Preparation
- Select the video channel or video input mode on the TV.
- Set the VTR/TV selector to "VTR". **1**
- Turn on the VTR.
- Make sure that the clock is set correctly.

To record a programme of a station stored on position number 1 (e.g. BBC1) in the SP tape speed from 21:30 until 22:00 on August 30. Today is August 25.

1 Load a cassette with the safety tab attached. **C**

2 Press the **MENU** button. **20**
The MAIN MENU screen appears.

3 Press **number button 1** to select "TIMER PROGRAMMING". **4**

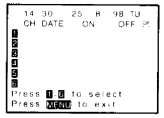

Programme number 1 is ready to accept your input.

4 Select an empty programme number using **number buttons 1** to **6**. **4**

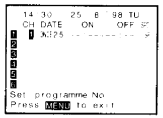

5 To select position number 1, press **number button 0** and **1**. **4**

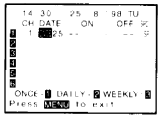

- If you record from the connected external equipment, make "L" or "SA" appear by pressing the **INPUT SELECT** button as follows: **3**

  L : Via the AUDIO/VIDEO (SCART) socket on the rear panel.

  SA: From the satellite receiver connected to the SATELLITE (SCART) socket on the rear panel.

To make corrections:
Press the SHIFT (←) button to move back to the item, or the SHIFT (→) button to move forward. **19**

6 Select a frequency of recording. (eg. once) **4**

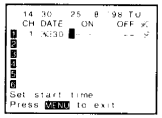

You can also set daily or weekly timer programme recordings. (See next page.)

7 Set the recording date. **4**

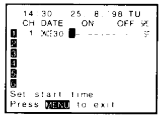

8 Set the recording start time and the off time. **4**

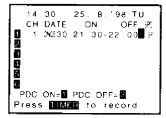

9 To set PDC, press **number button 1** : if not set, press **number button 2**. **4**

Note
If you have set the VTR to the satellite receiver control mode (SA displayed) in step *5*, PDC cannot be set.

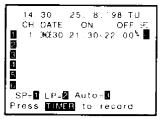

10 Select the tape speed (SP). **4**

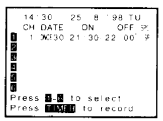

(For the tape speed "AUTO", see next page.)

When you set PDC in step *9*, "AUTO" cannot be chosen. Use either PDC or AUTO speed.

To set another programme, follow steps *4* to *10*.
In step *4*, select next programme number.

11 Press the **MENU** button. 20
Now programming is complete.

12 Press the two **TIMER** buttons simultaneously. 22

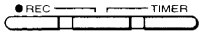

The power turns off and the VTR enters the timer standby mode.

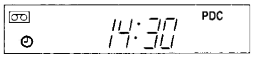

Daily and Weekly Recording

■ **Daily recording**
You can record TV programmes on the same channel at the same time Monday through Friday. 4
Press **number button 2** for "DAILY" in step *6*.

■ **Weekly recording**
You can record TV programmes on the same channel on the same day and time every week. 4
Press **number button 3** for "WEEKLY", then **number button 1** to **7** to select a day of the week in step *6*.

Confirming the Timer Programmes (During the Timer Programme Recording)

Press the **MENU** button. 20
The screen for confirming will appear.

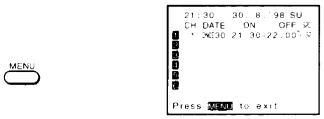

After about 30 seconds, the screen disappears.

Changing/Cancelling the Timer Programmes

1) If the ⏲ indicator is lit, press the two **TIMER** buttons to turn it off, and then turn the VTR on by pressing the **ON/STANDBY** button. 22 14

2) With steps *2* to *11*, change the items.
   - To cancel a programme, select the programme number you want to cancel in step *4*, and press the **CANCEL** button. The line is then cleared. 21

3) Press the two **TIMER** buttons to return to the timer standby mode. 22

Recording or Playback in the Timer Standby Mode

First press the two **TIMER** buttons to release the timer standby mode, and then press the **ON/STANDBY** button to turn on the VTR. The VTR will be available for use. 22 14
- Be sure to press the two **TIMER** buttons again to return the VTR to the timer standby mode after you have finished. 22

Auto Speed Adjust

If you are not sure if the tape is long enough for timer programme recording in the SP tape speed, set the recording tape speed to "AUTO". Recording starts in the SP tape speed and the VTR automatically selects the tape speed to record the programme to the end. If the tape length is not long enough, the tape speed automatically changes from SP to LP.

Notes
- It is necessary to select the tape length beforehand on the USER SETTING screen. (See page 20, "Tape Time Remaining".)
- When the LP tape speed is selected and the tape length is not sufficient to record the programme to the end, the programme cannot be completely recorded.
- The picture will be distorted when playing the part where the VTR switched the recording speed from SP to LP.

Error Indication

- The "E" (Error) indicator appears in the VTR display if you press the TIMER buttons when:
  —a cassette is not loaded.
  —the loaded cassette has no safety tab.
  —no timer programme is set.
  In these cases, a recording can not be made.

If a Power Failure Occurs During the Timer Programme Recording

- If the ⏲ indicator is missing in the VTR display after the power failure, the programmed contents have been cleared. Reset the timer programming.
- When power has failed for a short time, the colon of the current time display blinks. The programmed contents are not affected. Reset the clock.

Overlaps of the Programmes

If two timer programmes overlap, the recording start time of programme 2 has priority over the recording off time of programme 1.

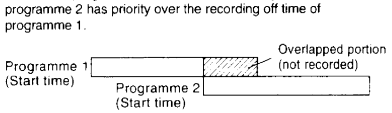

3 6 BASIC OPERATION
OPTIONAL SETTINGS / COUNTER FUNCTION

These functions will help your playback.

Optional Settings

You can easily make necessary settings using the on-screen display.

Preparation
- Turn on the VTR.
- Set the VTR/TV selector to "VTR". 1
- Select the video channel or video input mode on the TV.

1 Press the **MENU** button. 20
The MAIN MENU screen appears.

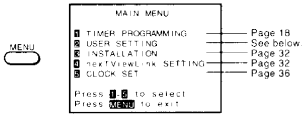

2 Press **number button 2** to select "USER SETTING". 4
For details on each item, refer to pages respectively as below.

With "ON" set, the VCR will update the VCR clock setting every morning at 8:00am. This auto clock updating will only operate if the channel set in the VCR position 1 carries valid clock information.
Press **number button 4** to switch "ON" and "OFF". 4

Press **number button 3** to turn on or turn off the VTR display during power standby. With "ON" set, VTR display will be cut-off to reduce energy consumption. 4

Press **SHIFT (→)** button to go to page 2/2 of USER SETTING. 19

Press **number button 4** to select "OFF", if the TV programme or the tape is monochrome. 4

With "ON" set, the PDC default setting for all timer programming will be set to on.
Pressing **number button 1** switches "ON" and "OFF". 4

3 Press the **MENU** button twice to return to exit. 20

Counter Function

You can view the clock, linear time counter or tape remaining time in the VTR display or on the TV screen.

Preparation
Set the VTR/TV selector to "VTR". 1

Counter Displays

Each time you press the **COUNT** button, the VTR display changes in sequence as follows: 16

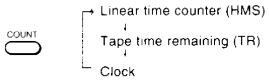

The indication above will also appear on the TV screen by pressing the **DISPLAY** button. They are switchable with the **COUNT** button. 27 16

To reset the linear time counter to "0H00M00S"
The counter is automatically reset to "0H00M00S" when a cassette is ejected. If you want to reset at another point, such as the beginning of a new recording, just press the **COUNTER RESET** button. 15

Notes
- The linear time counter does not work on non-recorded portions on the tape.
- When the tape is ejected or the VTR is turned off, the display changes to clock.
- If the tape rewinds back over "0H00M00S", "–" appears in the VTR display.
- The displayed time of the linear time counter is only an approximation.

Tape Time Remaining

1 Turn on the VTR and load a cassette. C

2 Press the **MENU** button to display the MAIN MENU screen. 20

3 Press **number button 2** to select "USER SETTING". 4

4 Press **number button 1** to select the tape length to be used. 4

① E180: for an E-195 tape or shorter
E240: for an E-210 or E240 tape
E260: for an E-260 tape
E300: for an E-300 tape

5 Press the **MENU** button twice to exit. 20

6 Press the **COUNT** button. 16
The tape time remaining indicator appears.

Notes
- The displayed remaining time is only an approximation.
- The time remaining is calculated according to the tape speed (SP, LP or SLP) and the cassette type.
- It is necessary to set the tape length correctly beforehand in step *4* when you use the time remaining display.

ADVANCED OPERATION

4 1 NTSC-RECORDED TAPE PLAYBACK

This VTR can play back an NTSC-recorded tape. You can watch the playback picture on a PAL system TV or an NTSC 4.43 system TV.

Setting for NTSC Playback

When you play back an NTSC-recorded tape on this VTR, make a setting on the USER SETTING screen according to your TV.

NTSC tape: tapes on which NTSC M system broadcasts mainly broadcast in the U.S. and Japan are recorded, and tapes recorded in the NTSC video system which are commercially available on the market.

Multi System TV (NTSC 4.43 compatible)

1. Press the **MENU** button to display the MAIN MENU screen. 20
2. Press **number button 2** to select "USER SETTING". 4
3. Press **SHIFT** (→) button to go to page 2/2 of USER SETTING and then set "NTSC ON PAL TV" to "**OFF**" by pressing **number button 2**. 19 4

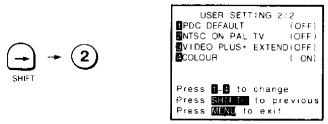

4. Press the **MENU** button twice to exit. 20

PAL System TV

1. Press the **MENU** button to display the MAIN MENU screen. 20
2. Press **number button 2** to select "USER SETTING". 4
3. Press **SHIFT** (→) button to go to page 2/2 of USER SETTING and then set "NTSC ON PAL TV" to "**ON**" by pressing **number button 2**. 19 4

4. Press the **MENU** button twice to exit. 20

Note
With this VTR, an NTSC tape recorded in the SLP tape speed can be played back. But there are some points to be observed.
- The quality of the playback picture and sound are not clear.
- Variable speed playback (picture search, still, slow playback, etc.) can't be performed properly.
- Digital auto tracking may not be performed properly.

Notes for Using a PAL TV for NTSC Playback

- Use a TV compatible with PAL video signals of PAL 60 (525 lines).
  When the TV, that is not compatible with PAL video signals of PAL 60, is used (when the TV, that is compatible only with PAL video signals of PAL 50 (625 lines), is used) NTSC playback pictures may roll up and down. This is not malfunction of the VTR or the TV.
  If your TV is equipped with a V-HOLD control, it may be possible to stop the rolling of pictures by adjusting this control.
  About PAL 50 and PAL 60 of PAL video signals:
  PAL 50 : is a normal signal and its PAL video signal is 50 fields (625 lines).
  PAL 60 : is a special signal and its PAL video signal is 60 fields (525 lines).
  Some TVs operate properly only with PAL 50 signals, some TVs operate properly with both PAL 50 and 60 signals.
  Therefore, if your TV is switchable between PAL 50 (625 lines)/PAL 60 (525 lines), you can view an NTSC recorded tape in the PAL colour system with your own TV.
- Depending on the TV used, the picture may shrink vertically and black bars may appear both at the top and bottom of the TV screen. This is not an indication of malfunction.
- Variable speed playback (picture search, still, slow playback, etc.) may produce a skewed image and quite a bit of noise on the picture.
- If the tape pre-recorded in the SP tape speed mode is played back in the picture search mode, the picture may be reproduced with no colour.

Note
For viewing an NTSC-recorded tape, we recommend using an NTSC 4.43 TV.

ADVANCED OPERATION

4 2 VARIABLE SPEED PLAYBACK

You can play back a tape at various tape speeds.

Variable Speed Playback

A variety of tape speeds are available on this VTR.

Picture search:	Plays back at 5 times or 13 times the normal playback speed so that you can quickly locate a particular scene.
Still picture:	Freezes the picture so that you can watch closer.
Slow-motion picture:	Plays back at 1/6th or 1/12th the normal playback speed.
Frame advance:	Advances the picture frame by frame

Picture Search

While playing back a tape, press the **FF** or **REW** button. 25 9
The tape runs at 5 times the normal playback speed.

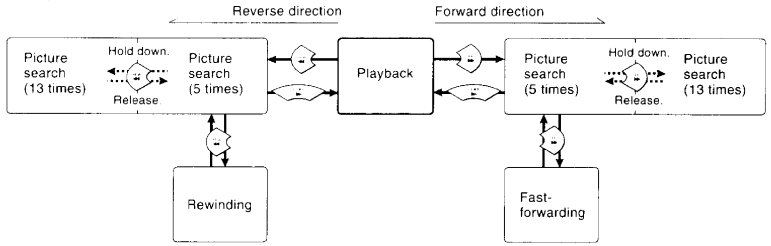

Still Picture

While playing back a tape, press the **PAUSE/STILL** button. 23
The picture freezes.

Slow-motion Picture

While playing back a tape, press the **SLOW** button. 8
The tape runs at about 1/6th the normal playback speed.

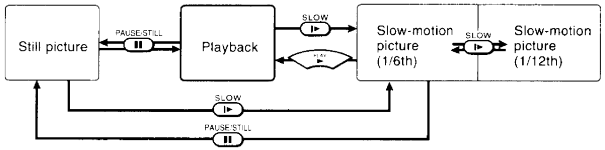

Notes
- The still mode is automatically cancelled after about 5 minutes and returns to normal playback.
- The still picture may shake if a picture of a fast-moving object or scene is frozen. This is not a defect in the unit.

■ Adjusting Still Picture Stability
If the still picture is distorted or flickers, hold down one of the **CH/TRK** buttons until the picture becomes stable. 17

Note
The distortion of the still picture may not be eliminated completely.

Notes
- The slow-motion picture mode is automatically cancelled after about 5 minutes and returns to normal playback.
- The slow-motion picture may flicker up and down. This is not a defect in the unit.

■ Adjusting the Tracking Manually
If the slow-motion picture is noisy, hold down one of the **CH/TRK** buttons until the best picture is obtained. 17

Note
The noise in the slow-motion picture may not be eliminated completely.

Frame Advance

While the picture is frozen (see "Still Picture"), press the **PLAY** button repeatedly. 24 D
The picture advances one frame as you press the button.

If you press and hold the button, the tape runs at 1/25th the normal playback speed.

To resume normal playback, press the **PAUSE/STILL** button. 23

Notes
- If you play back a tape recorded in the LP or SLP tape speed or a tape recorded on another VTR in various speed mode, the picture may be noisy or monochrome.
- When you use an NTSC-recorded tape, picture search and accelerated picture search, the slow-motion picture speeds are as follows.

	Picture search	Accelerated picture search	Slow-motion	
PAL(SP)	x5	x13	1/6	1/12
PAL (LP)	x5	x13	1/6	1/12
NTSC (SP)	x5	x9	1/7	1/15
NTSC (SLP)	x5	x27	1/7	1/15

1-9

INDEX SEARCH

You can easily locate the desired programme using the index signal registered on the tape.

About This Function

Index Search
The VTR plays back each programme with an index signal for about 5 seconds.

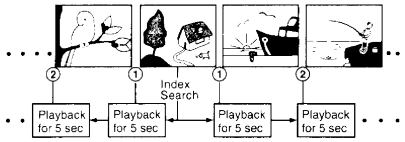

Skip Search
The VTR finds and plays back a programme with an index signal you specified.

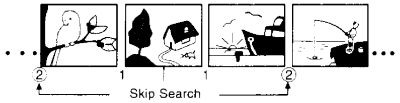

To use this function, index signals have to be registered on your tape. For registering index signals, follow the procedure below.

Registering Index Signals

■ **Registering index signals automatically**
An index signal is automatically registered **when a recording starts.**

Notes
- An index signal is not registered when the VTR is in the recording pause mode and recording restarts.
- An index signal is also registered when a timer programme recording starts.

■ **Registering index signals manually**
Index signals can be manually registered at desired points on the tape **during recording**.

Press the **INDEX** (+) button at a desired point. 6

Note
When registering two or more index signals, certain intervals are required: more than 1 minute in the SP tape speed and more than 2 minutes in the LP tape speed.

Index Search

This function plays back the tape for about 5 seconds at each index signal.

1 Load a cassette with the index signals registered. C

2 Press the **INDEX** (–) or (+) button in the stop or playback mode. 6

INDEX (–) : to search in the reverse direction

INDEX (+) : to search in the forward direction

The VTR fast-forwards or rewinds the tape. When an index signal is found, the VTR plays back the tape for about 5 seconds, and then resumes fast-forwarding or rewinding. This is repeated each time at an index signal.

3 Press the **PLAY** button when the desired programme is found. 24 D
Normal playback starts.

Notes
- At the very beginning of the tape, the index search function may not work properly.
- If you registered the index signals on a tape recorded on another VTR, the recording may be blurred at the index point and the index search may not work properly.

Skip Search

This function fast-forwards or rewinds the tape to the point at which the selected index signal is registered, and starts playback from there.

1 Load a cassette with the index signals registered. C

2 Press the **INDEX** (–) or (+) button twice in the stop or playback mode. 6

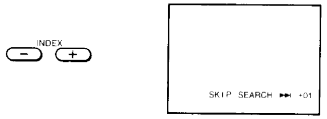

3 Press the **INDEX** (–) or (+) button depending on the direction where your desired programme is located. 6
Each time you press the (–) or (+) button, the number decreases or increases respectively.

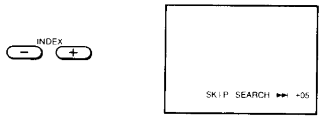

The VTR starts to search for the point you specified with the (–) or (+) button. When the point is found, playback will start automatically.

Notes
- You can set an index number up to ±20.
- The skip search is cancelled when the PLAY or STOP button is pressed.

Locating the Index Number

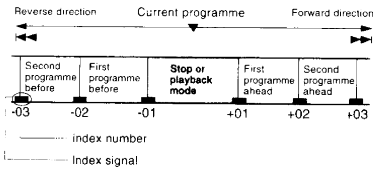

[Example]
- To locate the beginning of first programme before, press the **INDEX** (–) button three times to set the index number -02.
- To locate the beginning of next programme ahead, press the **INDEX** (+) button twice to set the index number +01.

NICAM COMPATIBILITY / AUDIO SELECT

This VTR incorporates a special decoder that can receive NICAM broadcast programmes.

NICAM Broadcast Programme

NICAM programmes are divided into 3 types. NICAM Stereo, NICAM Mono and Bilingual (transmission in another language). NICAM programmes are always accompanied by a standard mono sound broadcast and you can select the desired sound on the screen (for recording) or with the A.SELECT button (for playback).

NICAM Broadcast Setting

1 Press the **MENU** button. 20

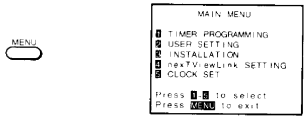

2 Press **number button 2**. 4

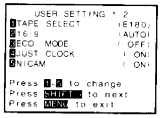

3 Press **number button 5** to set "NICAM" to "ON". 4

ON: Normally set at this position.
OFF: Only set at this position to record the standard mono sound during a NICAM broadcast if the stereo sound is distorted due to inferior reception conditions.

4 Press the **MENU** button twice to exit. 20

Monitoring Sound Output

When monitoring a TV programme or playing back a Hi-Fi recorded video tape, press the **A.SELECT** button to select a desired sound output. As the **A.SELECT** button is pressed, the sound output and the indicator change as below: 13

Sound type / VTR display	Stereo sound	Bilingual sound	Standard sound broadcast
L R	Heard in stereo (left channel and right channel)	Channel I (MAIN) heard from the left speaker. Channel II (SUB) from the right speaker.	Heard in monaural.
L	Left channel heard from both the left and right speakers.	Channel I (MAIN) heard from both the left and right speakers.	Heard in monaural.
R	Right channel heard from both the left and right speakers.	Channel II (SUB) heard from both the left and right speakers.	Heard in monaural.
Both L and R go off.	Heard in monaural.	Channel I (MAIN) heard from both the left and right speakers.	Heard in monaural.
MIX L R	Sound mixed the left and right channel, and the normal audio track. (See below.)		

Sounds of a recorded TV programme
This VTR is capable of recording sound in Hi-Fi system. Stereo broadcasts and bilingual sound broadcasts are recorded in its original sound system regardless of the setting. (See the list above.)

Notes
- When listening to a stereo broadcast or playing back a Hi-Fi tape recorded in stereo, you have to connect the VTR with the stereo audio system or the stereo TV with a SCART cable.
  The sound which is output from the AERIAL OUTPUT socket is monaural.
- If a tape which is not Hi-Fi recorded is played back, L, R indicators go off automatically and the sound output is monaural.

Audio Select

This unit's Hi-Fi stereo audio track (2-channel) can be used to playback an excellent Hi-Fi sound. Sound that has been recorded on the normal audio track is compatible with conventional VTR's.

When playing back a Hi-Fi recorded tape, press the **A.SELECT** button to select desired sound output. 13
The L, R indicators in the VTR display tell you what kind of sound output you are selecting. Accordingly, you can select the desired sound output while observing the lit and/or unlit indicators. (See above "Monitoring Sound Output".)

Audio Mix Function

You can select different audio outputs, e.g. mixing one of the Hi-Fi stereo audio tracks and one of the normal audio track.

This function enables you, for example, to record your voice on a Hi-Fi recorded tape ("Audio Dubbing", page 28).

Press the **A.SELECT** button several times to make "MIX" appear in the VTR display. 13

16:9 (WIDE SCREEN) COMPATIBILITY

This VTR is compatible with the 16:9 (Wide Screen) format.

16:9 (Wide Screen) Compatibility

The VTR automatically adjusts the image to fill the wide TV screen when you play back a tape commercially available which is recorded in the wide screen format, or when you record or play back a wide TV programme via the connected satellite receiver, etc.

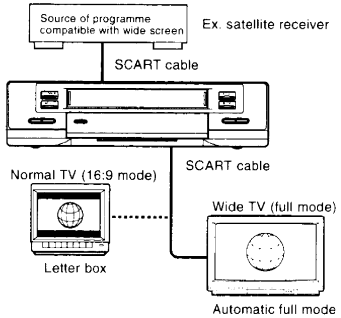

Important
Connect equipment compatible with wide screen, to the VTR using the SCART cable.

Setting of 16:9 Wide Screen

1 Press the **MENU** button. 20

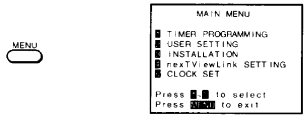

2 Press **number button 2**. 4

3 Press **number button 2** to set "16:9". 4

AUTO: Set when you use a wide TV.
The VTR detects wide TV programmes and normal TV programmes automatically when playing back and recording.
ON: The VTR always plays back and records in the mode compatible with 16:9 wide screen.
Set if the VTR cannot detect wide TV programmes with "AUTO" set.
OFF: Set if you do not use a wide TV.

4 Press the **MENU** button twice to return to the normal TV screen. 20

AUDIO DUBBING/TAPE COPYING

Using another VTR or external equipment, you can perform audio dubbing & tape copying.

Audio Dubbing

You can record sounds by importing from an external equipment connected to the AUDIO/VIDEO SCART, onto the normal audio track of a pre-recorded tape, without erasing the pictures or sounds on the Hi-Fi stereo track.
For example, you can record your narration on a tape which has been recorded on a video camera recorder.

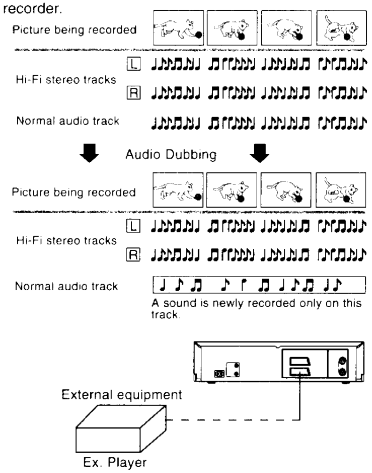

Preparation
- To import sounds from an external equipment, connect it to the AUDIO/VIDEO SCART.

1 Load a cassette you want to make audio dubbing on. C

2 Press the **PLAY** button to start playback. 24

3 Press the **PAUSE/STILL** button where you want to start audio dubbing. 23

4 Press the **A.DUB** button. 10

Some flickers may be produced on the screen. This is not a malfunction.

5 Press the **PAUSE/STILL** button to start audio dubbing. 23
Speak into the microphone or play the sound from the external equipment.

Notes
- To monitor the recorded sound, press the A.SELECT button to select the sound output. (See page 25.) 13

Tape Copying

Using another VTR or external equipment, you can copy a tape.

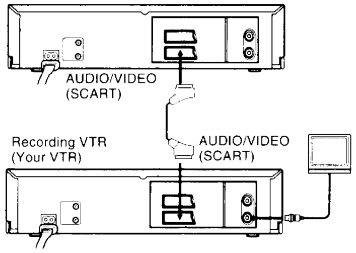

Important
It is permissible to record television programmes only in the event that third party copyrights and other rights are not violated.

1 Press the **INPUT SELECT** button so that the VTR display shows "L" depending on your connection. 3

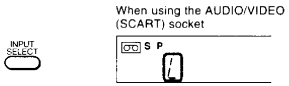

2 Press the **SP/LP** button to select the recording tape speed. 12

3 Play the tape on the playback VTR and press the **REC** buttons to start recording on this VTR. 7 G

4 Press the **STOP** button on each VTR when copying is finished. 26 E

Notes
- The picture quality of the copied tape is slightly less than the original picture quality.
- When monitoring a picture being recorded, press the TV/VIDEO button to make the "VIDEO" indicator appear in the VTR display and select the video channel on the TV. 2

MULTI BRAND REMOTE CONTROLLER

The remote controller can be compatible with various brands of TV by setting their control codes. The TOSHIBA code has initially been set to control TOSHIBA TVs.

Setting Control Codes

Preparation
Set the VTR/TV selector to "**TV**". 1

1 While holding down the **MENU** button, enter the two digits of your TV's brand code (listed right) using **number buttons**. 20 4

Hold down. MENU

example ⓪ → ②

2 Release the **MENU** button. 20

3 Point the remote controller at your TV and use each button listed below to make sure that your TV is operated correctly.

ON/STANDBY	To turn the TV on or off.	14
CH	To select TV channels in the upper or lower direction.	17
VOL (Volume)	To adjust the sound level.	19
INPUT SELECT	To select an external source such as a VTR.	3
Number buttons/ ENTER button	To select TV channels. Way of use may differ with models of TV. Check how they work on your TV. Ex. To select channel 3: • 0→3 • 0→3→ENTER • ENTER→3 To select channel 16: • 1→6 • 1→6→ENTER • ENTER→ENTER→1→6	4 18

Important
Some TVs may not respond to all the operations above, or may not be operated at all with this remote controller. In this case, operate your TV with its own remote controller.

Notes
- For some brands, several control codes (brand codes) are allocated. Try each of them until the buttons work on your TV.
- If you replace the remote controller's batteries, set the brand code again.

Table of Brand Codes

Brand name of your TV	Brand code
TOSHIBA	01, 14, 15, 16, 17, 19
AKAI	08
BANG & OLUFSEN	20
BLAUPUNKT	04
BRANDT	11
BRIONVEGA	20
CGE	19
CONTINENTAL EDISON	22
FERGUSON	11, 24, 25
FINLUX	02, 15, 20
FISHER	08
FORMENTI	20
GOLDSTAR	02
GRUNDIG	04, 15, 19
HITACHI	06, 10, 11, 22
IMPERIAL	19
JVC	07
LOEWE	02
LOEWE OPTA	02, 20
METZ	20
MITSUBISHI	02, 09, 14
MIVAR	19
NOKIA	21
NORDMENDE	10, 11, 22
PANASONIC (NATIONAL)	03, 21, 26
PHILIPS	02, 18, 20
PHONOLA	02, 18, 20
PIONEER	11, 21
RADIOLA	02, 18
RADIOMARELLI	20
REX	21
SABA	10, 11, 20, 21, 22
SALORA	21
SAMSUNG	02
SANYO	08, 14
SCHNEIDER	02
SELECO	21
SHARP	05, 14
SIEMENS	04
SINGER	20
SINUDYNE	20
SONY	13, 14
TELEAVIA	11
TELEFUNKEN	11, 24
THOMSON	10, 11, 22
WEGA	20
YOKO	02

nexTViewLink

If your TV has the "Easy Link / nexTViewLink" function, the VTR makes your VTR's setup and operations easier.

nexTViewLink FUNCTION of this VTR

Using a SCART cable (21 pins), a mutual control is available with the TV, VTR, SAT receiver, etc.
- The VTR automatically stores all your current TV stations in the VTR in the same position order as the TV channels. ("TV CH P. DOWN LOAD")
- Even if the TV is in standby mode, the TV automatically turns on and displays the video picture when you start playback on the VTR.
- The VTR automatically selects the same picture as you are watching on the TV, and record it. ("TV PICTURE RECORD")
- The VTR takes in the data and turns to timer standby mode, after a program data reserved is transferred to the VTR by a TV using such as a EPG (Electronic Program Guide). In this case, the TV's and the VTR's channel position must be set to the same TV station. The position could be stored from 1 to 99. Also the VTR's clock must be set.

Connect your Easy Link / nexTViewLink TV to the AUDIO/VIDEO (SCART) socket on the VTR using the SCART cable. Refer to your TV's manual additionally.

■ Connection to your Easy Link / nexTViewLink TV

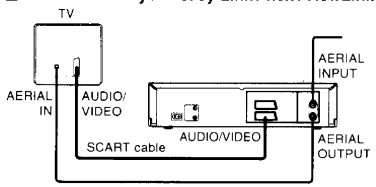

When connecting another VTR supporting EasyLink / nexTViewLink functions
The "nexTViewLink" system can connect 2 VTRs (VTR1 and VTR2) at the same time. This VTR is adjusted to "VTR1", so it should be connected to VTR2.

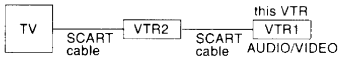

■ Connection to your Easy Link / nexTViewLink TV and a satellite receiver

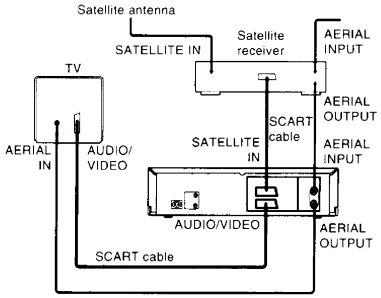

TV CH P. DOWN LOAD

Preparation
- Turn on the TV.
- Select the video channel or the video input mode on the TV.
- Set the VTR/TV selector on the remote controller to "VTR". 1

1 Press the **MENU** button to display the MAIN MENU screen. 20

2 Press **number button 4** to select "nexTViewLink SETTING". 4

④

3 Press **number button 1** to select "TV CH P. DOWN LOAD". 4

①

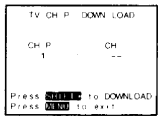

4 Press the **SHIFT** (→) button to start downloading. 19

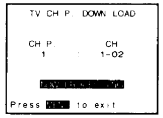

5 When the downloading is finished, the "nexTViewLink SETTING" screen returns.

6 Press the **MENU** button twice to exit. 20

Notes
- The available position numbers on the VTR are 1 to 99.
- When the TV's channel position is readjusted, the VTR automatically makes "TV CH P. DOWN LOAD".

TV PICTURE RECORD

Setting

Preparation
- Turn on the TV.
- Select the video channel or the video input mode on the TV.
- Set the VTR/TV selector on the remote controller to "VTR". 1

1) Press the **MENU** button to display the MAIN MENU screen. 20
2) Press **number button 4** to select "nexTViewLink SETTING". 4
3) Press **number button 2** to set "TV PICTURE RECORD" to "ON". 4

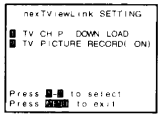

4) Press the **MENU** button twice to exit. 20

Note
It is necessary that the MANUAL SET UP screen has set "ANTENNA SELECT" to "MIX".
To display the MANUAL SET UP screen, press the MENU button to display the MAIN MENU screen first, and press number button 3 and then the number button to select "MANUAL SET UP".
If "ANTENNA SELECT" is set to "SW", press number button 3 to set it to "MIX".

Procedure

1 Load a cassette with the safety tab attached.

2 Press the **SP/LP** button to select the recording tape speed. 12

3 Press the **REC** button on the VTR, or simultaneously press the two **REC** buttons on the remote controller. 7

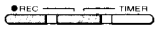

The VTR automatically selects the same picture as you are watching on the TV, and starts recording.

Depending on the picture sources, the recording switches the method. See below.

4 Press the **STOP** button to stop recording. 26

Notes
- This recording is not available on the timer programme recordings.
- When you do not perform "TV PICTURE RECORD", set "TV PICTURE RECORD" to "OFF".
- If the TV has a key to operate the TV picture recording, the "TV PICTURE RECORD" could be started from the TV. In this case, the VTR's "TV PICTURE RECORD" must be set to "ON".

Pictures and TV PICTURE RECORD

Picture	The VTR records:		During recording, if you change the channel or the input mode on the TV, the recording will be:
Channel selected on the TV If you performed "TV CH P. DOWN LOAD" (TV stations stored on the VTR and the TV in the same position order).	VTR channel of the same number as the TV channel	Ex. TV channel 1	Continued.
If you did not perform "TV CH P. DOWN LOAD" (TV stations not stored on the VTR and the TV in the same position order).	LINE (output of the TV)		Stopped.
Pictures of external equipment connected to the TV	LINE (output of the TV)		Stopped.
Channel selected on the VTR	VTR channel	Ex. VTR channel 1	Continued.

5 / SATELLITE CONTROL OF SATELLITE CHANNELS

Your satellite channels can be selected or changed on this VTR via the connected satellite receiver, same as TV channels.

Setting to Control Satellite Channels

You can select satellite channels by operating this VTR.
It is also possible to automatically change the satellite channels according to your programme setting in the timer programme recording (page 18).

Important
Put the satellite receiver on the top of the VTR as shown below. Do not block the sensor window.

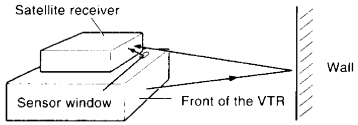

The infrared signals come out of the sensor window and the front of the VTR. Then they bounce off walls and other objects in the room and are received by the satellite receiver. The VTR sends out infrared signals to your satellite receiver even during timer programme recording.

Note
If the channels cannot be controlled properly because the infrared signal fails to reach the satellite receiver, change the position of the satellite receiver on the VTR so that it can receive the signal.

Preparation
- Keep the connected satellite receiver turned on.
- Make sure your satellite receiver is connected to the VTR correctly. (See page 9.)
- Select the video channel or video input mode on the TV.
- Set the VTR/TV selector to "VTR". 1

1 Press the **MENU** button to display the MAIN MENU screen. 20

2 Press **number button 3** to select "INSTALLATION". 4

3

3 Press **number button 3** to select "SATELLITE SETTING". 4

3

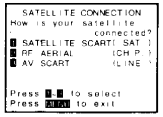

4 Select 1 to 3 using **number buttons** as below depending on your satellite receiver conection. 4

- **SATELLITE (SCART)** socket
- **AERIAL INPUT** socket

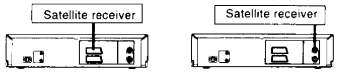

1 Select "SATELLITE SCART".

2 Select "RF AERIAL", and enter the position number you have chosen for satellite output (e.g.6, page 37) using **number buttons**.

- **AUDIO/VIDEO (SCART)** socket

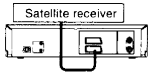

3 Select "AV SCART".

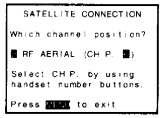

After you select 1 to 3, the screen changes as below.

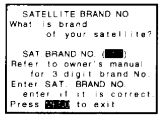

5 Enter three figures of the brand code for your satellite receiver by **number buttons**. Check the brand code list (page 33). 4

Ex. To enter brand code 33.

0 → 3 → 3

When you enter the brand code, the VTR sends a test signal to the satellite receiver to make sure that the brand code has been entered correctly. The signal will set the satellite channel to 12. If channel 12 is displayed on your satellite receiver, it means the brand code is set correctly.

Several codes may be allocated to one brand. Enter one after the other until the channel shows 12.

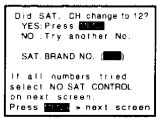

6 Press the **MENU** button. 19

7 Select 1 to 4 using **number buttons** as below depending on your satellite receiver. 4

Select . . .
1: If the channel of SKY ONE is 1*.
2: If the channel of SKY ONE is 8*.
3: If the order is personal choice.
4: If your satellite receiver did not change to channel 12 in step *5*.

* Refer to the "GUIDE Channel Table" (page 38).

If 1, 2 or 4 is selected, the screen returns to the INSTALLATION MENU of your setting after a few seconds.

If you selected 3, the screen changes as below.
It is necessary to make the setting of the GUIDE channels on this screen.
Follow steps from *4* on page 35 to set "CH P." column for all your satellite channels.

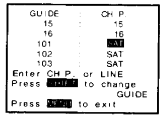

8 Press the **MENU** button twice to exit. 20

Controlling Satellite Channels

■ Using the remote controller of this VTR

1) Press the **SAT.CONT.** button to make "SAT", "SA" appear in the VTR display. 29

2) Select a desired satellite channel using **number buttons**. 4 18
Way of use may differ. Check how they work on your satellite receiver.

Ex. To select channel 3:
- 0→3
- 0→3→ENTER
- ENTER→3

To select channel 16:
- 1→6
- 1→6→ENTER
- ENTER→ENTER→1→6

Important
Some satellite receivers may not respond to all the operations above, or may not be operated at all with this remote controller. In this case, operate your satellite receiver with its own remote controller.

Notes
- Each time the SAT.CONT. button is pressed, this function goes on or off.
- To make a position number appear in the VTR display after you have cancelled this function, press the INPUT SELECT button.

■ Changing satellite channels automatically in the timer programme recording

When timer recording programming, press the **SAT.CONT.** button to display SA on the screen, and then enter a desired satellite channel using **number buttons** (step *5*, page 18). 29 4
Go through steps **1)** and **2)** above beforehand and confirm that channels are properly selected.

Note
Keep the satellite receiver turned on even while the VTR is in the timer programme recording.

Brand name	Brand code
TOSHIBA	17, 33
ALBA	1, 2, 9, 16, 17, 65, 66
AMSTRAD	3, 4, 5, 17, 55, 56, 76, 77, 89, 90, 91, 124
ARMSTRONG	17, 43
BIG BROTHER	7, 8, 17
BT	17, 122, 123
BUSH	2, 9, 16, 17, 65, 66
CABLE STAR	17, 101, 102, 103, 104
CABLETIME	17, 101, 102, 103, 104
CAMBRIDGE	17, 122, 123
CHANNEL MASTER	2, 3, 10, 17
D2MAC DECODER	17, 72
DRAKE	17, 45
ECHOSTAR	13, 14, 17, 92, 93, 94
FERGUSON	9, 15, 16, 17, 23, 38, 39, 59, 108
GRUNDIG	17, 19, 28, 71, 125
ITT/NOKIA	17, 26, 27, 50, 51, 52
JVC	17, 122, 123
LENCO	17, 49
MASPRO	17, 20, 64, 67
MATSUI	17, 125
NEC	17, 22, 57
NETWORK	9, 16, 17

Brand name	Brand code
NORDMENDE	17
PACE	9, 16, 17, 23, 38
PANASONIC	17, 61
PHILIPS	16, 17, 24, 46, 73
REDIFFUSION	17, 25
REVOX	17, 21
SAKURA	17, 62, 63, 68
SALORA	17, 26, 27, 50, 51, 52
SAMSUNG	17, 36
SIEMENS	17, 23
SENTRA	10, 17
SONY	17, 30
TATUNG/NIKKO	17, 32, 54, 58, 80, 81
TEXSCAN	17, 119, 120
THOMSON	7, 17, 39
TRISTAR	17, 31
UNIDEN	17, 67
VIDEOTRON	17, 105, 106, 107, 108, 109, 110, 121
WISI	17, 35, 37, 44, 93

- For some brands, several brand codes are allocated.
- Some satellite receivers may not be operated at all with this VTR.

SATELLITE

5-2 RECORDING FROM A SATELLITE RECEIVER

If you are using a satellite receiver, you can connect it to this VTR to record a satellite programme.

Recording Procedure

Preparation
- Turn on the VTR.
- Select the video channel or video input mode on the TV.
- Set the VTR/TV selector to "VTR". 1
- Make sure your satellite receiver is connected to the VTR correctly using a SCART cable (page 9), and turn it on.

1 Load a cassette with the safety tab attached. C

2 Press the **TV/VIDEO** button so that the "VIDEO" indicator appears in the VTR display. 2

3 Press the **INPUT SELECT** button so that "SA" indicator appears in the VTR display. 3

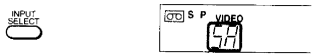

Each time you press the **INPUT SELECT** button, the display changes as follows. 3

→ TV (position number)→ L → SA (satellite)

4 Select the desired satellite channel on the connected satellite receiver.
Make sure that the selected channel is on the TV.

5 Press the **SP/LP** button to select the recording tape speed. 12

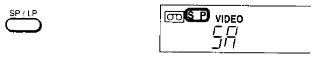

6 Press the **REC** button on the VTR, or simultaneously press the two **REC** buttons on the remote controller. G 7
Recording starts.

7 Press the **STOP** button to stop recording. 26 E

Satellite Monitor Function

You can watch a satellite programme from your connected satellite receiver even while the VTR is recording a TV programme, or is in the playback or stop mode.

Important
This function only applies when the TV and the satellite receiver are connected to the VTR using the SCART socket.

■ Watching a satellite programme while recording a TV programme

1) While recording a TV programme, press the **SAT.MONI.** button. 28
The "MONI" indicator appears.

Each time you press the **SAT.MONI.** button, the indicator goes on or off. 28

2) Choose a desired satellite channel on the connected satellite receiver.

■ Watching a satellite programme while the VTR is in the playback or stop mode

1) Press the **SAT.MONI.** button so that the "MONI" indicator appears in the VTR display. 28

2) Press the **TV/VIDEO** button so that the "VIDEO" indicator appears in the VTR display. 2

3) Choose a desired satellite channel on the connected satellite receiver.

Notes
- If you make the on-screen display (ex. MAIN MENU screen) appear on the TV, this function is cancelled.
- The satellite monitor function is also available in the timer programme recording mode (page 18).

■ Watching a TV programme while recording a satellite programme

1) While recording a satellite programme, press the **TV/VIDEO** button so that the "VIDEO" indicator disappears in the VTR display. 2

2) Choose a desired TV channel on the TV.

5 3 SATELLITE
Video Plus+ DELUXE RECORDING OF SATELLITE PROGRAMMES

You have to set the GUIDE channel to record a satellite programme by Video Plus+ DELUXE.

GUIDE Channel Setting for Satellite Channels (Using a Satellite Receiver)

The VTR generally does this setting during "Setting to Control Satellite Channels" procedure (page 32). Use this procedure to correct the GUIDE channels or to make the GUIDE channel setting if your satellite receiver has a channel order other than SKY or ASTRA.

Preparation
- Select the video channel or video input mode on the TV.
- Set the VTR/TV selector to "VTR". 1

To set a GUIDE channel 101 of SKY ONE.

1 Press the **MENU** button to display the MAIN MENU screen. 20

2 Press **number button 3** to select "INSTALLATION". 4

3 Press **number button 4** to select "VIDEO PLUS+ GUIDE CH". 4

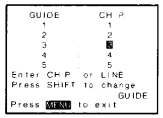

4 Scroll the numbers to put 101 in the center position of the "GUIDE" column using the **SHIFT** button. 19

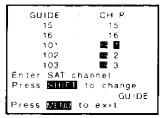

Refer to the chart you prepared (page 38).

Satellite stations	GUIDE	Channel on your satellite receiver *A	*B
SKY ONE	101	1	8
SKY NEWS	102	2	12
SKY MOVIES	103	3	16
THE MOVIE CHANNEL	104	4	18
SKY SPORT	105	6	20
NICKELODEON / NICK AT NIGHT	106	7	46
PARAMOUNT	106	7	46
EURMENUORT	107	[illegible]	[illegible]
GALA VISION	[illegible]	[illegible]	[illegible]
	144		
	145		
DISNEY CHANNEL	148	5	26
T.N.T./CARTOON NETWORK	149	17	37

*A is typical SKY order. *B is ASTRA TRANSPONDER order.

5 Press the **SAT.CONT.** button (SA displayed), and enter a channel number on the satellite receiver using **number buttons**. 29 4

If SKY ONE is channel 8 on your satellite receiver channel selector . . .

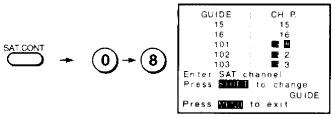

6 To set GUIDE channels for other satellite channels, repeat steps *4* and *5*.

7 Press the **MENU** button three times to exit. 20

Now you can make Video Plus+ DELUXE recordings of satellite channels. (See page 16.)

6 1 MANUAL SET UP
MANUAL SET UP

The manual procedure of Auto Set Up will help an additional TV station storing or clock resetting, etc.
This VTR can store up to 48 positions for TV stations.

Reset-Up Automatically

Use this procedure if the Auto Set Up needs to be made again, for example, after a power failure, when plugged off, or in the event of receiving stations change.

Preparation
- Turn on the TV, and select the video input mode or video channel if you made the aerial connection (page 11).
- Set the VTR/TV selector to "VTR". 1
- If your satellite receiver is connected using an RF lead, select SKY ONE on the satellite receiver. Auto Set Up will allocate position number 6 on the VTR for the satellite output.

1 Press the **ON/STANDBY** button to turn on the VTR. 14 A

2 Press the **MENU** button to display the MAIN MENU screen. 20

3 Press **number button 3** to select "INSTALLATION". 4

4 Press **number button 1** to select "AUTO SET UP". 4
The VTR starts automatic TV station storing and clock setting if you press the **SHIFT** (→) button. 19

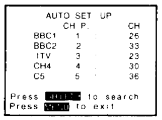

Note
If "– –" is shown, perform "Manual Storing of TV Stations" (page 35) for the TV station.

5 Press the **MENU** button three times to return to the normal TV screen. 20

Notes
- If the time of the clock is not correct after this procedure, perform "Clock Setting" on this page.
- The TV stations in tuning range numbers 2 and 3 are not stored automatically in this procedure. To receive these stations, you must store them manually. See "Manual Storing of TV Stations" on page 37.

Clock Setting

If BBC1 is stored in position number 1, the VTR automatically sets the clock, and will adjust it to the BBC1 signal at 8:00 every morning.
If BBC1 is not stored in position number 1, follow the procedure below to set the clock.

The item to be set blinks. You can change the position by pressing the SHIFT buttons. 19

To set the clock to 14:30 on August 25, 1998

1 Press the **MENU** button to display the MAIN MENU screen. 20

2 Press **number button 4** to select "CLOCK SET". 4

3 Set the hours and minutes. (24 hours clock format) 4

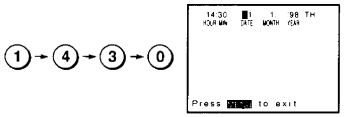

4 Set the day and month. 4

5 Set the year with its last two digits. 4

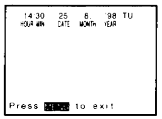

6 Press the **MENU** button. 20
Now the clock starts.

7 Press the **MENU** button again to exit. 20

Manual Storing of TV Stations

Information

Each TV station operating in the U.K. (e.g. BBC1, ITV) broadcasts on a unique frequency, which in turn has been allocated a transmission channel number (21 – 69). However, this unique frequency and corresponding number changes for each TV station from area to area. For example, BBC1 in London uses channel number 26, while in Oxford BBC1 uses channel number 57 (i.e., CH57).
This VTR will indicate these channel numbers (1 – 9, 21 – 69) during tuning.

Tuning range number	Band	TV channel number
–	VHF	A – J (1 – 10), 11, 13 E2 – E12 (82 – 92)
	UHF	E21 – E69 (21 – 69)
	CATV	X, Y, Z (71, 72, 73)
2	CATV	1 – 53 (48MHz to 464MHz, 8MHz steps)
3	CATV	S1 – S41 (1 – 41)

Preparation

- Select the video channel or video input mode on the TV.
- Set the VTR/TV selector to "VTR". 1
- Turn on the VTR. 14
- If you use a satellite receiver, make the connection correctly (page 9) and turn it on.

To store BBC1 to position number 1 on your VTR.

Allocation of the TV stations into the memory of the VTR is expected to be as follows, for Video Plus+ DELUXE recording.

BBC1: Position number 1
BBC2: Position number 2
ITV: Position number 3
CHANNEL 4: Position number 4
CHANNEL 5: Position number 5

Satellite: Position number 6, example (if connected by an RF lead only as shown below.)

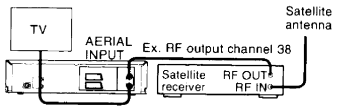

In this case, select position number 6 in step *5*, and channel 38 in step *6* if the output channel of your satellite receiver is 38, for example. Make sure that TV receives a satellite broadcast.
Whenever you watch or record a satellite programme, select position number 6.

Important

This procedure can be performed only when the VTR display shows a position number on the VTR. If the "L" or "SA" is displayed, press the INPUT SELECT button so that the position number appears. 3

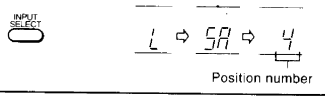

1 Press the **MENU** button to display the MAIN MENU screen. 20

2 Press **number button 3** to select "INSTALLATION". 4

3 Press **number button 2** to select "MANUAL SET UP". 4

4 Press **number button 2** to select "MANUAL TUNING". 4
The VTR is now in the tuning mode, and the screen display disappears.

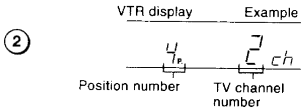

5 Press the **CH/TRK** button to select position number 1. 17

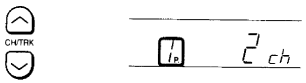

■ **To change the tuning range number**
Press **number button 6** repeatedly to select a tuning range number. (See the table on left.) 4

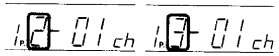

6 Press and hold the **SHIFT** button to start searching for BBC1. 19

Higher numbered channel

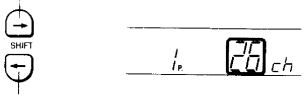

Lower numbered channel

If the received TV signal is not BBC1, press and hold the **SHIFT** button again.

(continued)

MANUAL SET UP

(continued)

7 If a clear picture does not appear on the TV screen after searching is finished, make fine adjustment with the **INDEX** buttons. 6

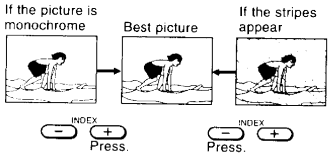

8 Repeat steps *5* to *7* for other TV stations, and for satellite stations if your satellite receiver is not connected by a SCART.

Record all position numbers you stored on the VTR in the chart (GUIDE Channel Table) so that you will be ready to use the Video Plus+ DELUXE recording.

9 Press the **MENU** button. 20
Channel tuning is now finished.

Once station storing is done, you can select a TV programme by the position number on which the TV station is stored.

You can prevent the use of certain position numbers.

1) Set the VTR to the tuning mode following steps *1* to *4* of the station storing procedure.
2) Select the position number you want to skip with the **CH/TRK** button. 17

To skip position number 4.

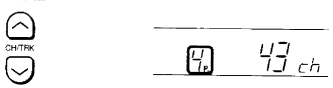

3) Press **number button 3**. 4
The following indication will appear in the VTR display with the skip function on or off.

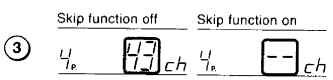

If you press **number button 3** again, the TV channel number will appear and the skip function will be cancelled. 4

4) Press the **MENU** button to exit. 20

To cancel channel skipping
Follow steps **1)** to **4)** above.

GUIDE Channel Table

TV stations	GUIDE	Position number in which the TV station has been memorized on the VTR
BBC1	001	1
BBC2	002	2
ITV	003	3
CHANNEL 4	004	4
CHANNEL 5	005	
RTE (IRELAND)	006	
NETWORK 2 (IRELAND)	007	
TV NA GAELTACHTA	008	

Satellite stations	GUIDE	Channel on your satellite receiver *A	*B
SKY ONE	101	1	8
SKY NEWS	102	2	12
SKY MOVIES SCREEN 1	103	3	16
SKY MOVIES SCREEN 2	104	4	18
SKY SPORT 1	105	6	20
NICKELODEON	106	7	46
PARAMOUNT CHANNEL	106	7	46
EUROSPORT	107	30	4
GALA VISION	108		
MTV EUROPE	109	14	15
TCC CHALLENGE TV Home Shopping Network	110	10	35
THE DISNEY CHANNEL Sky Box Office 1	111	5	26
BBC WORLD SERVICE	112		
UK ARENA	113		
UK STYLE	114		
UK HORIZONS	115		
SAT 1	116		
PREMIERE	117		
3 SAT	118		
FOX KIDS	119	18	
NATIONAL GEOGRAPHIC	119	18	
PRO 7	120		
TELE 5	121		
SCIENCE FICTION HISTORY	122	26	
SOAPS Christian Channel	122	26	
UK GOLD	123	11	23
DISCOVERY, Discovery Home and Leisure	124	9	41
BRAVO EBN TROUBLE	125	8	42
CNN	126	31	28
WEATHER,RACING	127	20	
SKY BOX OFFICE 2	127	20	
PERFORMANCE	128		
THE ARTS CHANNEL	128		
SKY MOVIES GOLD SKY TRAVEL	129	27	60
UK LIVING THE FANTASY CHANNEL	130	13	34
GRANADA PLUS	131	19	
GRANADA MEN & MOTORS	131	19	
SKY SCOTTISH, SKY BOX OFFICE3	132	21	
TV5 EUROPE	133		
TVE INTERNATIONAL	134		
MBC/ARABIC	135		
QVC	136	12	38
SPORTNET	137		
COUNTRY MUSIC TV	138	24	24
VIDEO HITS ONE	139	15	22
SKY SPORT 2 / SKY SOAPS / SKY TRAVEL	140	16	47
THE HISTORY CHANNEL	140	16	47
SCI-FI CHANNEL	140	16	47
SKY SPORTS GOLD	140	16	47
TV ASIA	141		
LA-5	142		
LIVE TV	143		
SUPERCHANNEL	144	28	50
JAPAN TV	145	17	24
SELECT TV	146		
MOVIE CHANNEL / FILMNET 1	147	35	63
DISNEY CHANNEL	148	5	26
T.N.T./CARTOON NETWORK	149	18	37

*A is typical SKY order. *B is ASTRA TRANSPONDER order.

GUIDE Channel Setting for TV Channels Manually

Video Plus+ DELUXE is a timer recording system for an easier programming that requires you only to enter a PlusCode assigned to a desired programme. This section explains the necessary set-up to make Video Plus+ DELUXE recordings.

Information

You can perform timer recording very easily using the Video Plus+ DELUXE programming system of this VTR. Before making a Video Plus+ DELUXE recording, it is necessary to set GUIDE channels in the VTR.

Clock Setting (page 36)

↓

Manual Storing of TV Stations (page 37)

↓

Setting to Control Satellite Channels (pages 32, 33)
(When using a satellite receiver)

- Satellite input setting
- Brand code setting
- GUIDE channel setting

GUIDE channels for satellite channels are automatically set when you choose SKY or ASTRA. If you correct the setting, or if your satellite receiver is not SKY or ASTRA, use the procedure on page 33.

↓

GUIDE Channel Setting (pages 35, 39)
(Video Plus+ DELUXE SET-UP)

- GUIDE Channel Setting for TV Channels Manually
- GUIDE Channel Setting for Satellite Channels

↓

Video Plus+ DELUXE RECORDING (page 16)

Important

There is no need to perform this procedure if the TV stations have been stored to the position numbers (1 for BBC1, 2 for BBC2, 3 for ITV, 4 for CHANNEL 4 and 5 for CHANNEL 5) on the VTR (page 12).

Preparation

- Select the video channel or video input mode on the TV.
- Set the VTR/TV selector to "VTR". 1

1 Press the **MENU** button to display the MAIN MENU screen. 20

2 Press **number button 3** to select "INSTALLATION". 4

3 Press **number button 4** to select "VIDEO PLUS+ GUIDE CH". 4

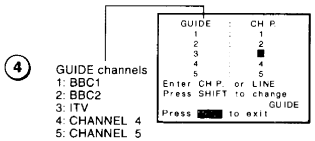

GUIDE channels 1 to 5 have been factory set to position numbers 1 to 5 respectively.
Make sure that the numbers are matched as above.

Note

To set another TV channel, select the GUIDE channel using the SHIFT button, and in the "CH P." column enter the position number in which you have stored the TV station by number buttons.

4 Press the **MENU** button three times to exit. The GUIDE channel setting for TV channels is complete. 20

Now you can make a Video Plus+ DELUXE recording of TV programmes.
(See page 16.)

If you use a satellite receiver, make the GUIDE channel setting for satellite channels as well.

SECTION 2
ADJUSTMENT PROCEDURES

1. MECHANICAL ADJUSTMENT

1-1. Mechanical Parts Location

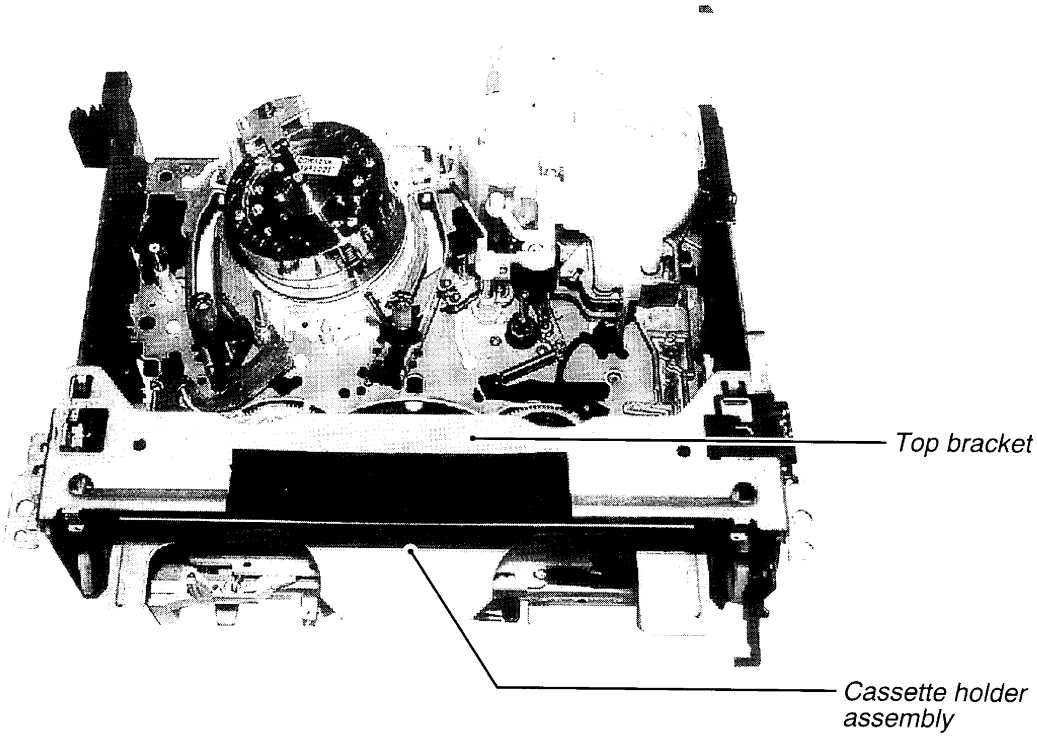

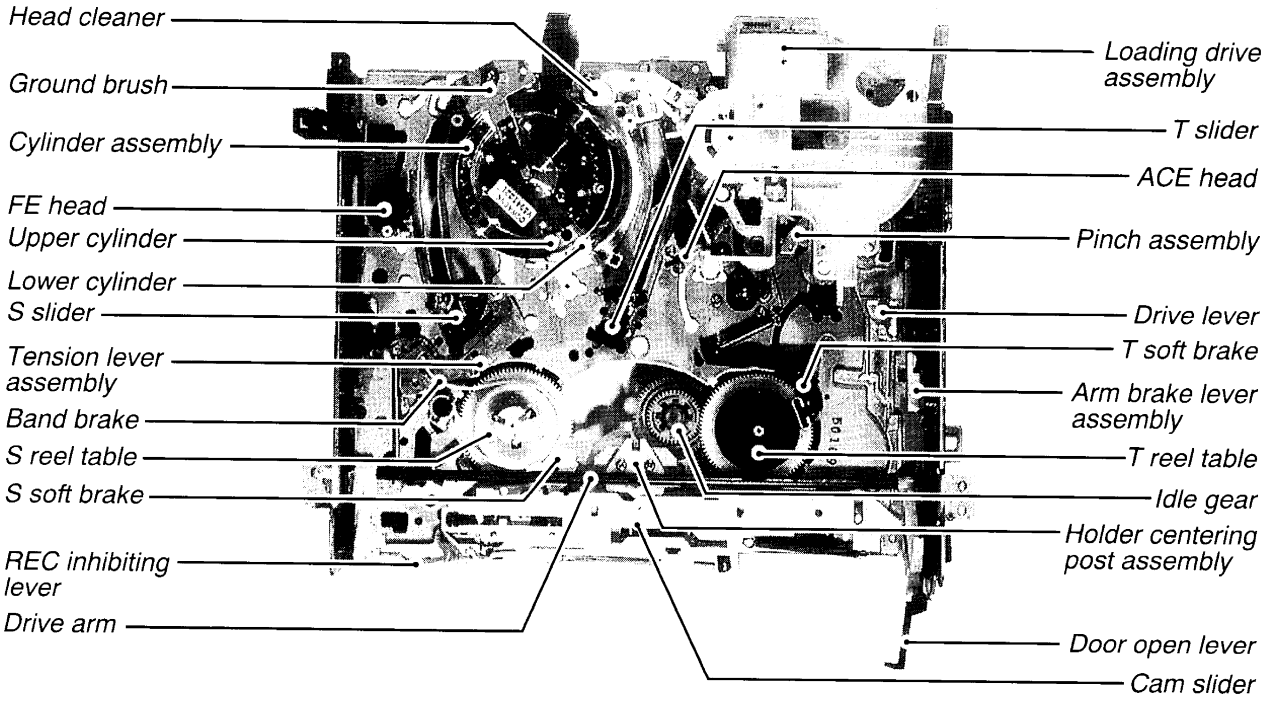

Fig. 2-1-1 Top view

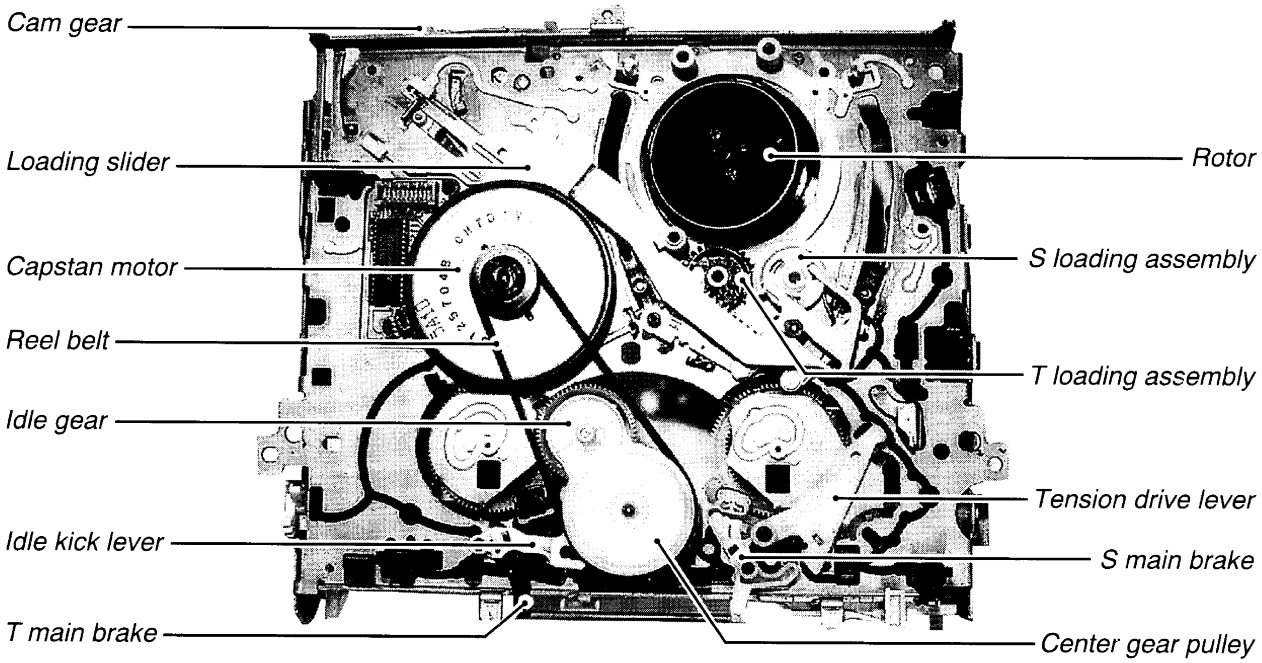

Fig. 2-1-2 Bottom view

1-2. Servicing Jig List

Table 2-1-1

Alignment tape 70909409 (ST-C6) 70909410 (ST-C7)	Back tension cassette gauge 70909103	Torque cassette gauge (KT-300NR) 70909199
Taper nut driver 70909228	VTR cleaning kit	VTR lubrication kit
Grease		

Note:

- Conventional alignment tapes ST-C1 (70909227) and ST-C3 (70909264) can be used partially.

1-3. Main Parts Servicing Time

- Part replacement time differs from servicing life time of each part.
- Following table is prepared based on a standard condition (room temperature, room humidity). The replacement time will be varied depending upon operation environment, using methods, operation duty, etc.
- Particularly, life of the upper cylinder depends upon operation conditions.

Table 2-1-2

	Part Name	Service time (Operating Hours)										Note
		500	1000	1500	2000	2500	3000	3500	4000	4500	5000	
Tape Transport System	Tension post	△	△	△	△	△	△	△	△	△	△	• When cleaning, use a swab or piece of gauze soaked in alcohol. • After cleaning, cleaned parts are dried comepletely, and then load a video cassette.
	S/T slant guide post											
	Impedance roller *											
	No. 8 guide post											
	Capstan											
	No. 9 guide post											
	No. 3 guide post											
	S/T guide roller	△	△	△	O	O	O	O	O	O	O	• When lubricating, always use the specified oil. • When the lubricating, apply one or two drops of oil after the cleaning with alcohol.
	Upper cylinder	△	O	O	O	O	O	O	O	O	O	
	Slip ring assembly		O	O	O	O	O	O	O	O	O	
	FE head	△	△	△	O	O	O	O	O	O	O	
	ACE head	△	O	O	O	O	O	O	O	O	O	
	Pinch roller	△	O	O	O	O	O	O	O	O	O	
Tape Drive System	Capstan motor	△	△	△	△	△	O	O	O	O	O	• Check the back tension.
	Loading motor				O	O	O	O	O	O	O	
	Loading belt/ Reel belt	△	O	O	O	O	O	O	O	O	O	
	S reel table assembly		O	O	O	O	O	O	O	O	O	
	T reel table assembly		O	O	O	O	O	O	O	O	O	
	Idle gear assembly	△	O	O	O	O	O	O	O	O	O	
Other	Band brake assembly		O		O		O		O		O	

△ : Cleaning O : Check and replace if necessary

* There are two types. One type has an impedance roller and another type has no impedance roller.

1-4. V3 Mechanism Check Method

If the abnormal condition is caused by the mechanism itself, analyze the cause according to the following procedures.

1-4-1. External Appearance Check

(1) Check whether there are foreign matters or not inside the VTR.

(2) Check whether the cylinder and the guides for tape transport system are contaminated.

1-4-2. Motor Sensor System Check

Check whether some abnormalities are found in the motor or the sensor system (including control circuits) according to the flow chart.

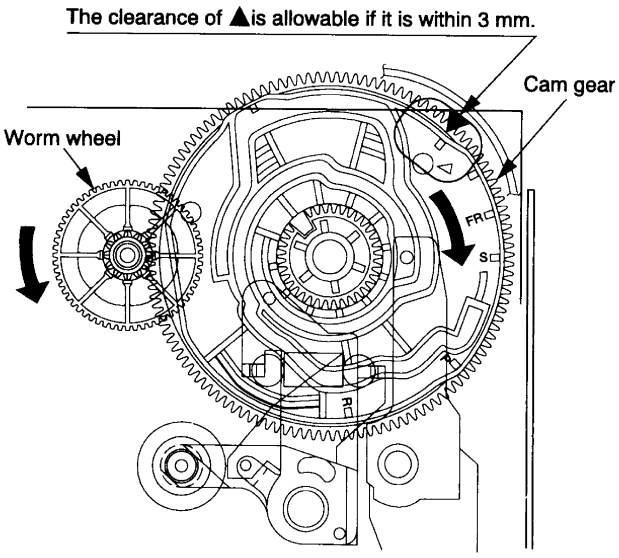

Fig. 2-1-3

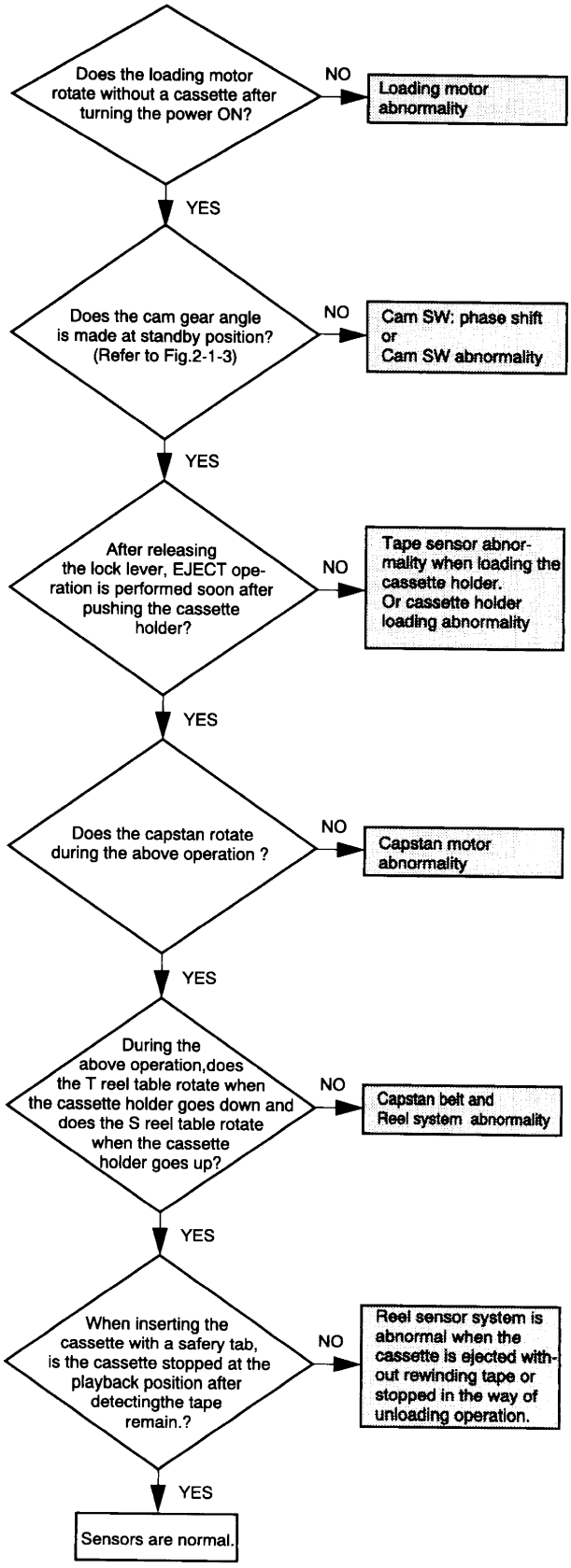

Fig. 2-1-4

1-4-3. Abnormality Analysis by Self-check Function

The unit used V3 mechanism has a self-check function. The self-check function works as a system which stored some abnormal condition. So, use this function to try to analyze the cause(s).

For the data display method and the content of the data, refer to the self-check function (described on page 2-47) in item 2-2.

Notes:

- Abnormal data is displayed only when the first abnormal condition occurs, and is not displayed in the second time. Accordingly, the claim from customers and the actual data displayed may be different.
- The data is stored only when the power turns off after occurring the abnormality condition(s). The data is not stored when the unit operation is recovered by the microcomputer.
- After repairing, initialize the data by pressing the [COUNTER RESET] button while displaying the abnormal mode.

The typical examples in abnormal condition are shown below.

Table 2-1-3

A	B	C	Abnormal Condition	Check Item
06	01	09	Cylinder is stopped at playback position during playback the tape.	Check the cylinder motor. Check if the cylinder and tape transport guide are clogged.
02	01	0d	Cylinder is stopped at FF/REW position during rewind the tape.	
06	02	09	T reel sensor is abnormal at playback postion during playback the tape.	Check the capstan motor. Refer to the cases 2 and 3 describe on the table "Defective analyzing list".
03	03	07	S reel sensor is abnormal at playback position during REVIEW the tape.	
01	04	02	Cassette-in and out operation cannot be performed.	Refer to the case 1 described on the table "Defective analyzing list".
03	05	08	Mode shift cannot be performed during shifting to REVIEW.	

A: System control mode, B: Abnormality No., C: Mechanical position when an abnormality occurs.

1-4-4. Check by Defective Analyzing List

If the abnormality causes the mechanism abnormal condition, presume, confirm and treat the defective according to the "Defective analyzing list" in table 2-1-4.

(1) Manual mechanism operation (mode shift) method

Push in the lock lever R and L manually and turn the worm wheel counterclockwise as shown in Fig. 2-1-3. The cam gear is turned clockwise and the mode shifts to the direction where the loading operation can be performed. So, check the mechanism condition in the defective mechanism position when the abnormality occurs.

(2) Defective parts replacement

When a defective occurs due to the defective part(s) and the part(s) is replaced, take care the following items.

- Especially as for the mechanical parts requiring the phase alignment, take care of the part replacement **E.g.**. Assembling mode, phase alignment mark and etc.
- As for the part(s) requiring lubricant such as a specified amount of oil or grease, apply grease or oil according to the instructions and do not stick grease or oil to the portions without allowing to stick it (especially in removal and assembly).

(3) Check after treating the defective

After replacing a defective part and/or aligning a part, first check the mechanism operation manually and confirm that no problem occurs, and then mount the mechanical deck, turn the power ON and check the mechanism operation.

Note:

- After replacing the defective parts according to the procedure of the treatment method for the "damage and phase shift of mechanical part", check the operation of the mechanism again, since the same (or similar) defective problem may occur due to other serious cause (in mechanism or electrical circuit) when performing the actual total check with turning the power on.

Table 2-1-4 Defective analyzing list

Case	Defective Phenomenon (Main Items)	Presumed Cause (Main Cause)	Check Method
1	Power does not turn on. Loading operation is defective. Mode shift operation is defective.	<General> Mechanical stops due to mechanical phase unmatching.	Check mode shift "Cassette out FF/REW position" can be performed when turning worm wheel.
	Loading operation is not performed.	Loading motor does not rotate. (Loading motor is defective or circuit is defective.)	Check loading motor whether it turns by the outer power supply (12.5V).
	Unloading operation is not performed.	S reel does not wind the tape.	Refer to case 3 in this table.
2	Playback operation is not performed. Playback operation is defective.	<General> Main brake is not released. (ON) T soft brake is not released. (ON) Idoler does not swing. Pinch does not press.	Check mechanical position.
		Capstan motor does not rotate. (Capstan motor is defective or circuit is defective.)	Check capstan motor.
	Playback picture does not appear. Video recording can not be performed.	<In case of no mechanical problem> Cylinder is defective. (Circuit is defective.)	Check cylinder assembly.
3	Playback interruption. Detective phenomenon during playback. Recording interruption.	Reel rotation detection is defective. (Sensor is defective. Circuit is defective.)	Check sensor output.
		Idler does not swing.	Check mechanical position.
		Reel belt is removed.	Check the reel belt is removed or not.
4	FF operation is not performed. FF operation is defective. REW operation is not performed. REW operation is defective. Others: REV/FF is not performed. Others: REV/FF is defective.	Main brake is not released. (ON) T soft brake is not released. (ON) Idler does not swing. Pinch is not released.	Check mechanical position.
		Capstan motor does not rotate. (Capstan motor is defective or circuit is defective.)	Check capstan motor.
5	REVIEW is not performed.	Main brake is not released. (ON) T soft brake is not actuated . Idler does not turn. Pinch does not press.	Check mechanical position.
		Capstan motor does not rotate. (Capstan motor is defective or circuit is defective.)	Check capstan motor.
6	Slot-in is not performed. Cassette can not be inserted.	<General> When the F/L is mounted on the mechanical deck,the position is not correct.	Check mechanical position.
7	Capstan servo does not work. Capstan servo is uneven. Tape speed is fast. Tape speed is slow. Tape speed is uneven. FG pulse is not output.	Capstan motor is defective.	Check capstan motor.
		ACE head control output is defective. (Circuit is defective.)	Check ACE head. Check CTL output.
8	Audio output does not come out. Audio output is small. Audio output variation is large. Audio output is uneven. Audio distortion. Audio noise. Others: Audio is defective.	ACE head is defective.	Check ACE head. Check CTL output.
		Tape transport adjustment is not defective.	Perform tape transport adjustment again after confirming tape transport condition.
		Hi-Fi head (cylinder) is defective. (Circuit is defective.)	Check cylinder. Check whether B+14V is supplied.

Treatment: If the mechanical is found out to be defective according to the procedures described above, perform the following treatment.

- Misassembling, mechanical phase mismatch .....Repair correctly.
- Parts defect, parts damage.....Replace parts.

If the mechanical is found out not to be defective according to the procedures above, check the circuit(s).

1-5. Mechanical Deck Removal and Mounting

1-5-1. Mechanical Deck Removal

1. Remove three screws (1) mounting the top cover (2) and remove the top cover sliding backward and lifting upward.
2. Remove the front panel (3).
3. Remove FFC (4) connecting between main unit (5) and KDB unit (6) and remove the lead wire (7) connecting between main unit (5) and FCB unit (8).

Note:

- In this case, remove FFC (4) on KDB unit (6) side, and lead wire (7) on FCB unit (8) side.

4. Remove two screws (9) and one screw (10) securing the mechanical deck (11).
5. Remove the claw securing the main unit (5).
6. Remove the mechanical deck (11) with the main unit (5) from the chassis lifting the terminal board (12) slightly and pulling the top bracket (13) upward.

Note:

- When pulling the top bracket (13) upward, take care not to deform the reinforcement plate located below the F/L assembly.

7. Remove the lead wire connecting between the mechanical deck (11) and the main unit (5) or terminal unit (14).
8. Turn over the mechanical deck (11).
9. Remove the reel belt (15) and one screw (16).
10. Remove four claws securing the mechanical deck (11) and the main unit (5), and then remove the main unit (5) pulling upward.

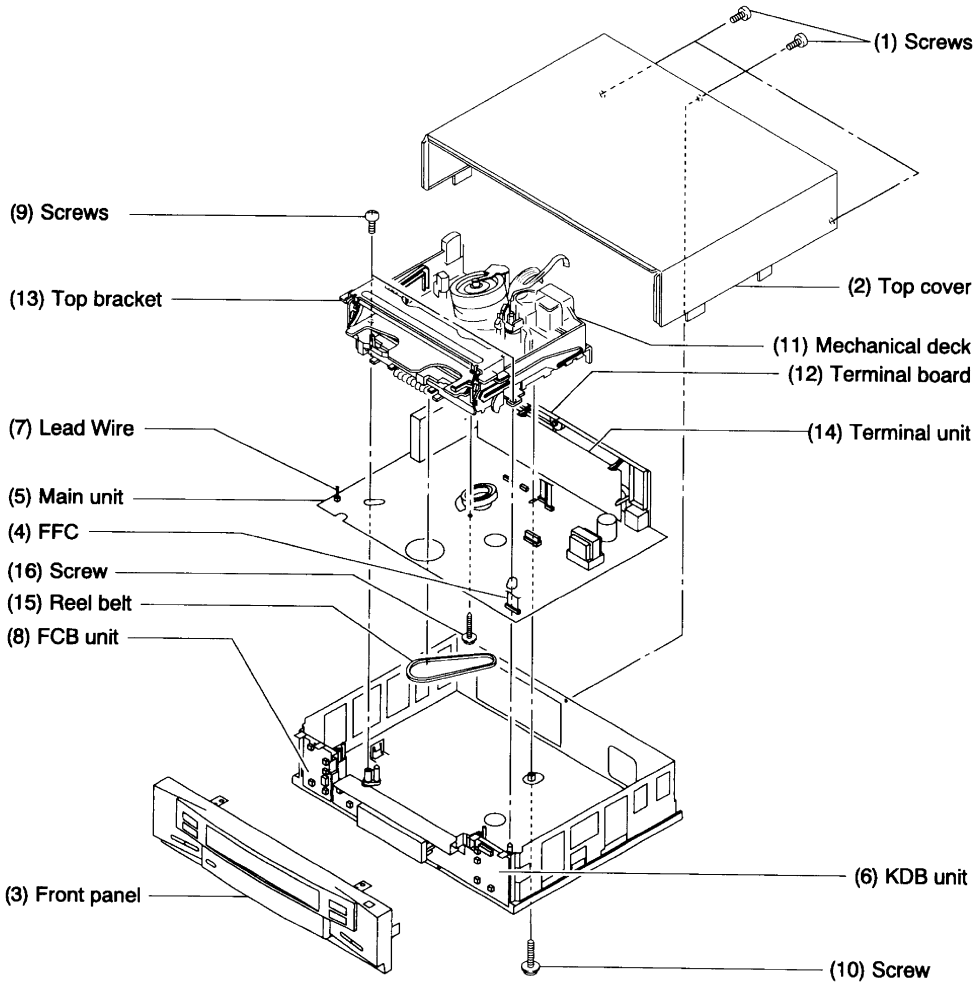

Fig. 2-1-5

1-5-2. Mechanical Deck Mounting

1. Turn over the mechanical deck and lower the main unit vertically adjusting the tape end sensor and etc. to the holes.

Notes:

- Adjust the rotor of the cylinder motor and the stator of the main unit, and then lower the main unit further more till four claws catch the mechanical deck completely.
- Take care not to damage the rotor and the stator.
- When locking the claw of the front right side to the main unit, turn the REC inhibit lever so as not to damage the switch.

2. Mount the mechanical deck on the chassis in reverse order of removal.

Note:

- When mounting the front panel, mount it with its door fully open.

1-5-3. Confirmation of Each Operation Mode without Cassette

1. Shut out the light to the start/end sensor.
2. Release the both sides of the lock lever and make a slot-in condition.
3. Turn the reel table manually located on the opposite side of the rotating reel table.
4. In this condition, confirmation of each operation mode can be performed.

Note:

- When turning the opposite side reel table of the rotating reel table manually in playback, FF/REW mode, and sending no reel pulse, the auto eject or power off function is performed.

1-6. Main Parts Replacement

1-6-1. Top Bracket Replacement

1. Remove two securing screws (2) on the top bracket (1).
2. Remove the top bracket (1) lifting in the direction shown by the arrow.

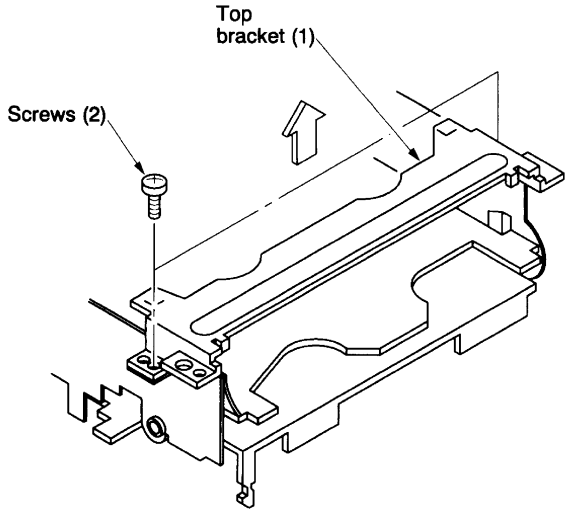

Fig. 2-1-6

3. When mounting the top bracket (1), move the tip of the grip lever (3) on the cassette holder assembly to the inclined portion of a trapezoidal cam, and then mount the top bracket (1).

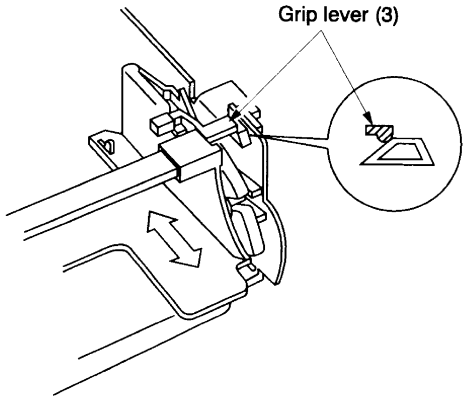

Fig. 2-1-7

Note:

- After remounting the top bracket (1), move the cassette holder forward and backward, and then confirm the claws of the lock lever (5) catch completely the both left and right sides of the stopper section (4) at the top bracket (1).

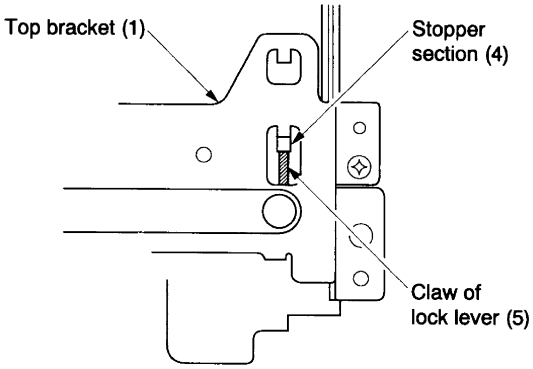

Fig. 2-1-8

1-6-2. Cassette Holder Assembly Replacement

1. Remove the top bracket. (Refer to item "1-6-1. Top Bracket Replacement".)
2. The cassette holder assembly (1) is guided along the guide grooves (2) with both left and right bosses of the cassette holder assembly (1). So first remove each side boss (3) on both left and right sides of cassette holder assembly (1) from the guide groove (2).
3. When the cassette holder assembly (1) is set at the EJECT position, the boss is located at (a), so move the boss from (a) to (b) and remove the bosses on both left and right sides simultaneously.

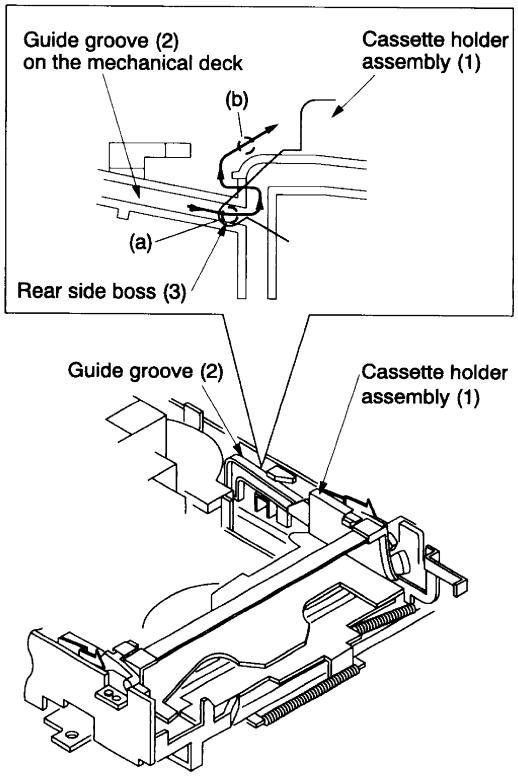

Fig. 2-1-9

Note:

- The grip lever (4) on the cassette holder assembly (1) may catch the trapezoidal cam on the mechanical deck (2), so perform the work lifting the grip lever in the direction shown by the arrow.

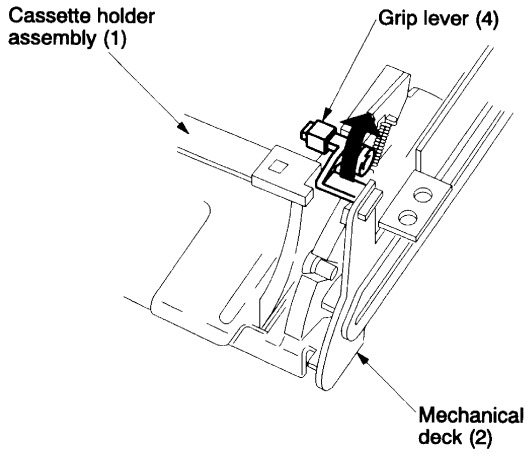

Fig. 2-1-10

4. After removing the front side bosses (5) on both left and right sides, remove the cassette holder assembly (1) pulling to the front side.
5. When mounting the cassette holder assembly (1), insert the front side bosses (5) to the U shaped groove of the drive arm (6) and the guide groove (2) on the mechanical deck lifting the rear side of the cassette holder assembly (1).

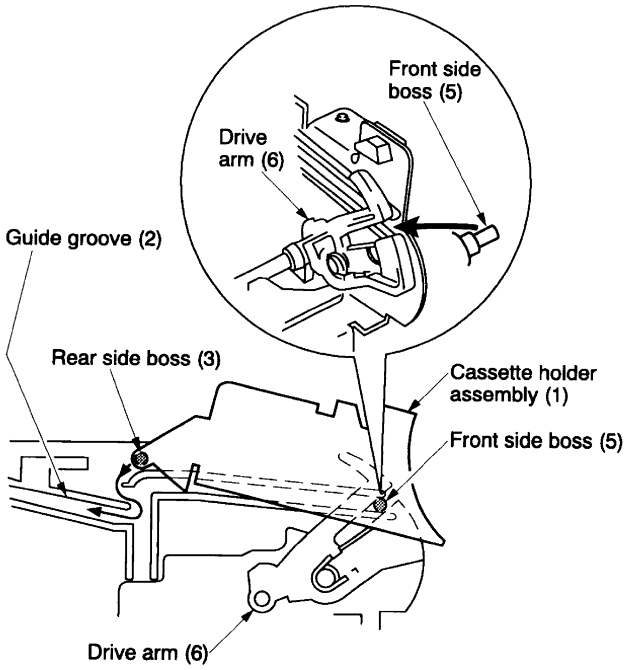

Fig. 2-1-11

6. When mounting the rear side bosses (3), perform the reverse order of removal.

1-6-3. Door Open Lever Replacement

1. Release the lock lever (2) on the cassette holder assembly (1) pressing in the direction shown by the arrow.

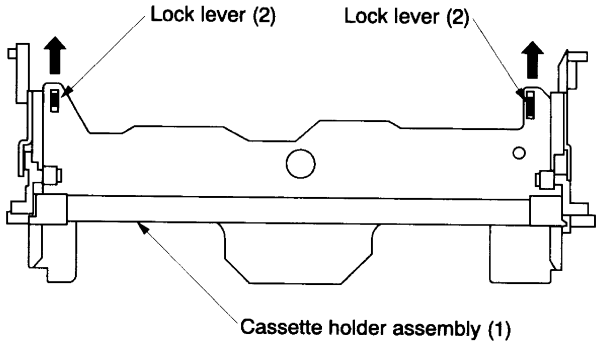

Fig. 2-1-12

2. Move the cassette holder assembly (1) slightly to the rear side.
3. Remove the claws (A) and (B) on the door open lever (3) from the mechanical deck (4).
4. Match the boss on a new door open lever (3) and the hole (C) on the mechanical deck, and then insert the claws (B) first and then (A) to the mechanical deck (4).

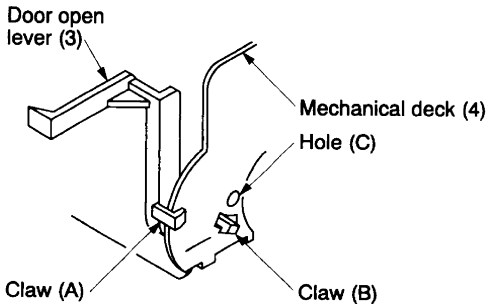

Fig. 2-1-13

5. Remount the cassette holder assembly to the position as it was.

1-6-4. Drive Lever Gear Replacement

1. Make the cassette holder assembly to the slot-out (EJECT) position.

Note:

- In this condition, both mark holes on the F/L drive slider (1) and the mechanical deck fit with each other, also the hole of the boss on the drive lever gear (2), the center of the gear tooth and the marking line are in line.

2. Move the claw of the drive arm (3) to the direction of the arrow (A) and remove the drive lever gear (2) upward.

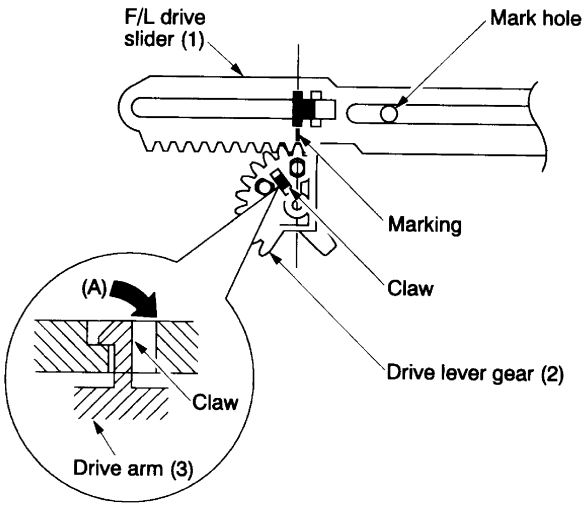

Fig. 2-1-14

3. When remounting the drive lever gear (2), take care of the phase position (refer to the note described above.) and mount in the reverse order of removal.

1-6-5. Drive Arm Assembly Replacement

1. Remove the top bracket assembly. (Refer to item "1-6-1. Top Bracket Replacement".)
2. Remove the cassette holder assembly. (Refer to item "1-6-2. Cassette Holder Assembly Replacement".)
3. Remove the door open lever. (Refer to item "1-6-3. Door Open Lever Replacement.")
4. Remove the drive lever gear. (Refer to item "1-6-4. Drive Lever Gear Replacement".)
5. Pull the REC-inhibiting lever slightly to the front side, turn the drive arm assembly (1) to the front side and push it in the direction shown by the arrow. Remove the left side boss (2) on the drive arm assembly (1) from the cutout of the guide groove on the mechanical deck (3).
6. Remount the drive arm assembly (1) in the reverse order of removal.

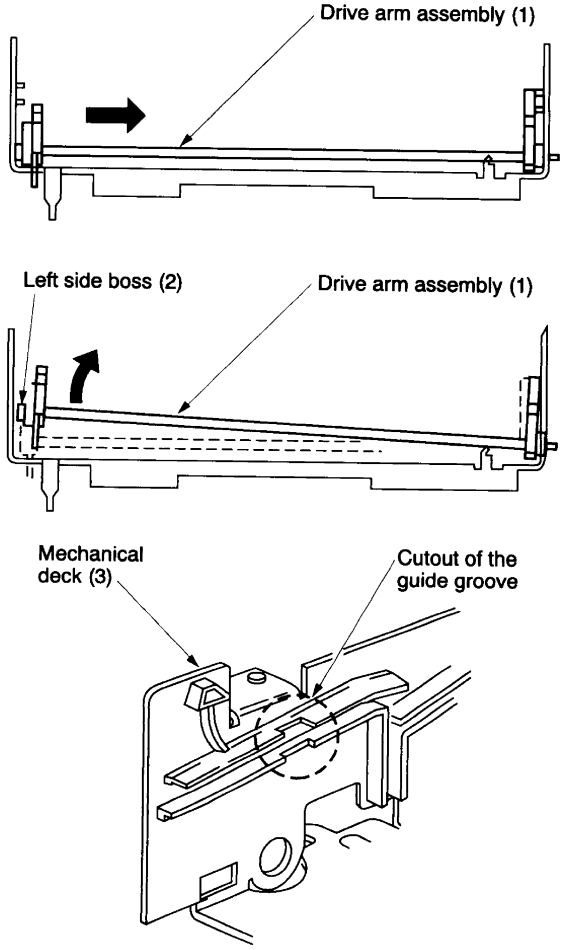

Fig. 2-1-15

1-6-6. Cam Lever Replacement

1. Remove the top bracket. (Refer to item "1-6-1. Top Bracket Replacement".)
2. Remove the cassette holder assembly. (Refer to item "1-6-2. Cassette Holder Assembly Replacement".)
3. Remove the cam slider. (Refer to item "1-6-40. Cam Slider Replacement".)
4. Remove the loading drive assembly. (Refer to item "1-6-28. Loading Drive Assembly Replacement".)
5. Remove the drive lever. (Refer to item "1-6-39. Drive Lever Replacement".)
6. Remove the pinch roller assembly. (Refer to item "1-6-20. Pinch Roller Assembly Replacement".)
7. Remove the cam gear. (Refer to item "1-6-30. Cam Gear Replacement".)
8. Move the cam lever (1) until it stops in the direction shown by the arrow (A). Pull out the cam lever (1) lifting up straightly at the position where the cam lever (1) stops.
9. Apply grease to the portions of bosses (A) to (C) on a new cam lever.

Notes:

- Confirm that the boss (A) on the cam lever (1) is inserted into the hole on the F/L drive slider (2).
- After inserting the cam lever (1), confirm that the cam lever (1) moves smoothly.

10. Replace the cam lever in the reverse order of removal.

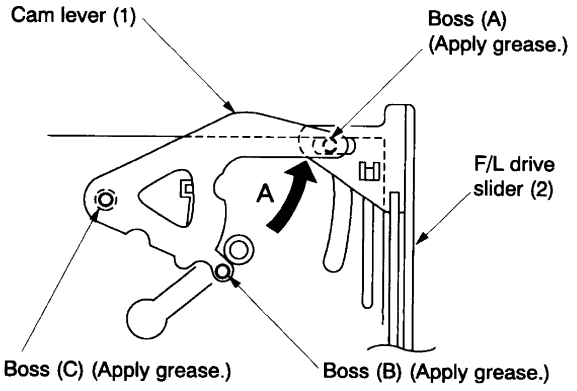

Fig. 2-1-16

1-6-7. F/L Drive Slider Replacement

1. Remove the top bracket. (Refer to item "1-6-1. Top Bracket Replacement".)
2. Remove the cassette holder assembly. (Refer to item "1-6-2. Cassette Holder Assembly Replacement".)
3. Remove the cam slider. (Refer to item "1-6-40. Cam Slider Replacement".)
4. Remove the loading drive assembly. (Refer to item "1-6-28. Loading Drive Assembly Replacement".)
5. Remove the drive lever. (Refer to item "1-6-39. Drive Lever Replacement".)
6. Remove the pinch roller assembly. (Refer to item "1-6-20. Pinch Roller Assembly Replacement".)
7. Remove the cam gear. (Refer to item "1-6-30. Cam Gear Replacement".)
8. Remove the cam lever. (Refer to item "1-6-6. Cam Lever Replacement".)
9. Remove the drive lever gear. (Refer to item "1-6-4. Drive Lever Gear Replacement".)
10. Push the F/L drive slider (1) in the direction shown by the arrow (A) and slide it. Furthermore, pull out it to the front side lifting it in the direction shown by the arrow (B).
11. Apply grease to the shaded parts (a) to (d) on a new F/L drive slider (1).

Note:

- For the phase alignment of the drive lever gear, refer to item "1-6-4. Drive Lever Gear Replacement".

12. Replace the F/L drive slider (1) in the reverse order of removal.

Note:

- After completion of the replacement, confirm that the F/L drive slider (1) moves smoothly.

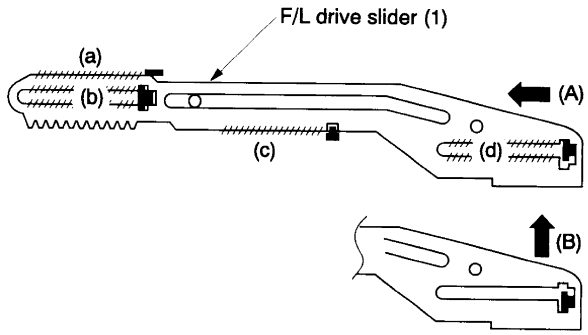

Fig. 2-1-17

1-6-8. Arm Brake Lever Assembly and Arm Brake Torsion Spring Replacement

1. Make the cassette holder assembly to the slot-out (EJECT) position.
2. Turn the arm brake lever assembly (1) in the direction shown by the arrow (A) until it stops. Pull out the arm brake lever assembly (1) to the front at the position it stops.

Note:

Take care that the arm brake torsion spring (2) is removed forcefully.

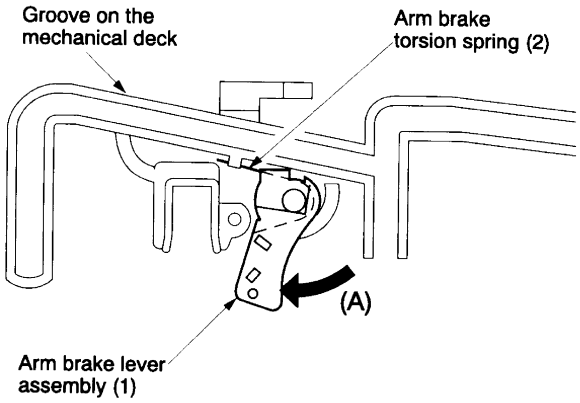

Fig. 2-1-18

3. Hook the arm brake torsion spring (2) temporarily to a new arm brake lever assembly (1).

Note:

- Take care of the direction of the arm brake torsion spring (2) so that the longer end of the arm brake torsion spring (2) is hooked on the temporary hook.

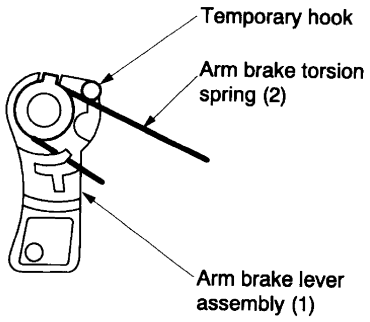

Fig. 2-1-19

4. Insert the hook portion on the arm brake lever assembly (1) to the cutout on the mechanical deck.
5. Turn the arm brake lever assembly (1) counterclockwise and fix it at the position which the arm brake lever assembly (1) faces to the straight below.
6. When pushing the tip of the arm brake torsion spring (2) located at (B) position, the tip is removed from the temporary hook and moves to the hook on the mechanical deck.
7. The arm brake lever assembly turns to the specified position by force of the arm brake torsion spring.

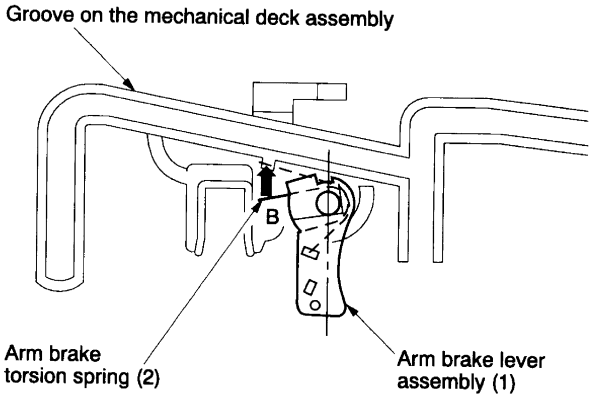

Fig. 2-1-20

1-6-9. Cylinder Assembly Inspection and Replacement

<Inspection>

1. Check if the tape transport surface on the lower cylinder assembly are not damaged.
2. Check if the rotation of the upper cylinder assembly is not abnormal.

When any abnormality is found according to the inspection procedures described above 1 and 2, replace the cylinder assembly.

<Replacement>

1. Remove the ground brush assembly.
2. Remove the head cleaner. (Refer to item "1-6-13. Head Cleaner Replacement.")
3. Remove the FPC (1) on the Preamplifier.
4. Remove three screws (2) and the cylinder holding plate (3) and (4). (Refer to item "1-6-12. Cylinder Holding Plate Replacement".)
5. Remove the cylinder assembly (5).
6. Remount the cylinder assembly (5) in the reverse order of removal. Fix the cylinder pressing slightly in the direction shown by the arrow (A) and the cylinder holding plate (3) pressing slightly in the direction shown by the arrow (B). (Tightening torque: 294 – 392 mN•m (3 – 4 kg•cm))

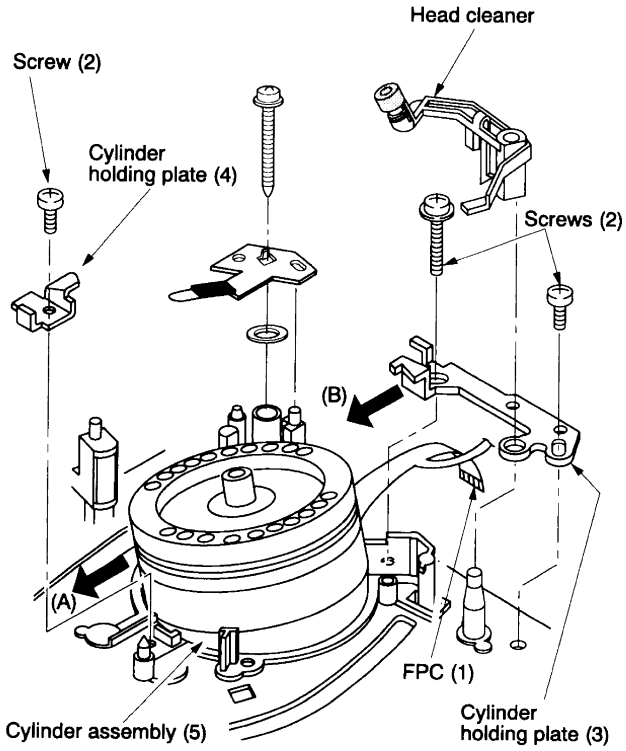

Fig. 2-1-21

Note:

- When replacing, take much care not to touch the video head directly and damage the cylinder.

7. Perform the tape transport adjustment.

1-6-10. Upper Cylinder Assembly Inspection and Replacement

<Inspection>

1. Check if the video heads are damaged or worn out.
2. Check the video heads for clogging. (In case that the clogging is not remedied after cleaning.)

<Replacement>

1. Remove the ground brush assembly.
2. Remove two securing screws (1) and remove the upper cylinder assembly (2).
3. Clean the new upper cylinder assembly (2) and the flange (3) mounting surface with a cleaning kit.
4. Align the head Ⓐ (green) and the marker on the rotary transformer PC board (4) and then mount the upper cylinder assembly (Tightening torque : 294 – 392 mN•m. (3 – 4kg•cm)

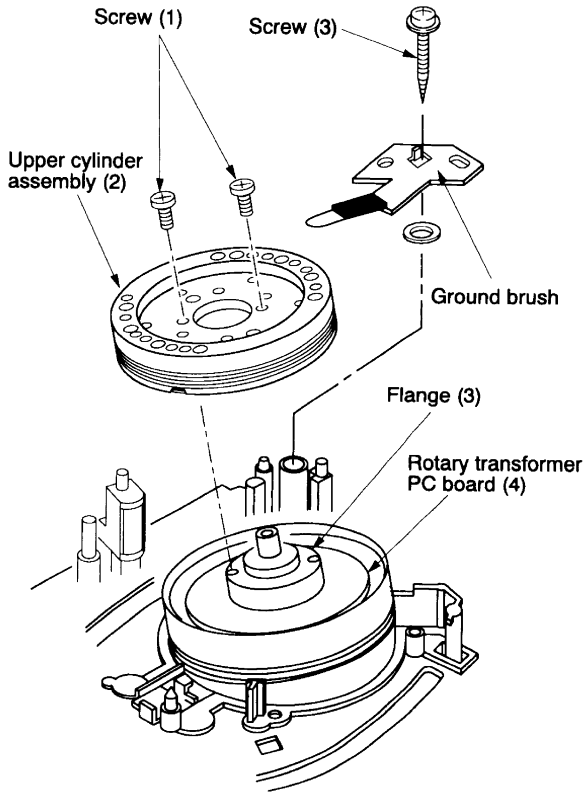

Fig. 2-1-22

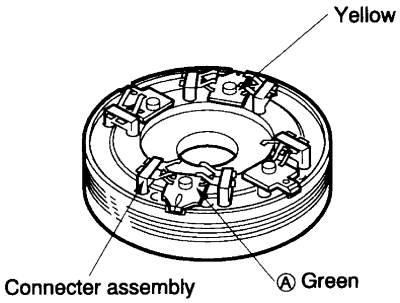

Fig. 2-1-23

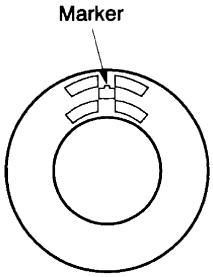

Fig. 2-1-24

Note:

- During the work in steps 3 to 4, take care not to touch the connector assembly and deform the spring.

5. Perform the tape transport adjustment according to its procedures.

1-6-11. Lower Cylinder Assembly Inspection and Replacement

<Inspection>

1. Check if the tape transport surface on the lower cylinder assembly is not damaged.
2. Check if the rotation of the upper cylinder assembly is not abnormal.
3. Check if the FPC on the Preamplifier is not damaged.

When any abnormality is found under the inspection described in the steps (1) to (3), replace the cylinder assembly.

<Replacement>

1. Remove the cylinder assembly. (Refer to item "1-6-9. Cylinder Assembly Inspection and Replacement".)
2. Remove two securing screws (1) and remove the upper cylinder assembly (2).
3. Replace the lower cylinder assembly (3).
4. Mount the lower cylinder assembly in the reverse order of removal taking care not to touch the video head directly and damage the cylinder.

Note:

- Take care not to deform the joint spring on the upper cylinder assembly (2).

5. Perform the tape transport adjustment according to its procedures.

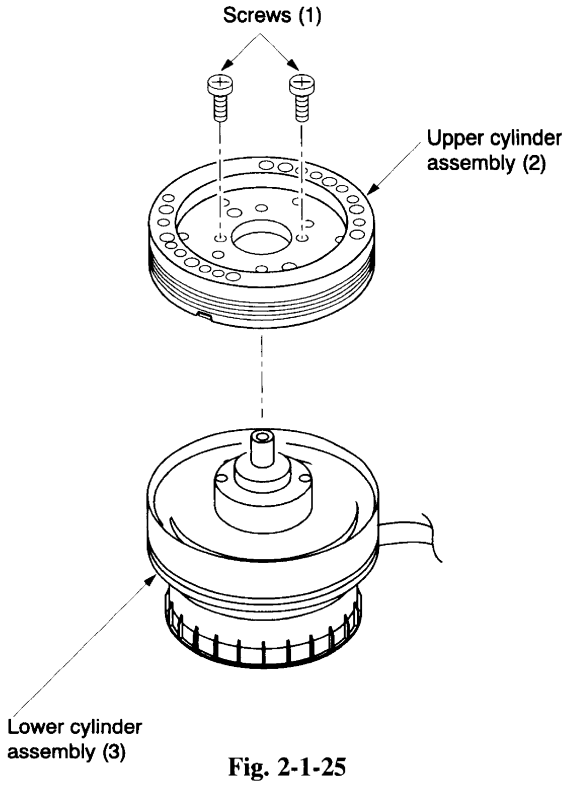

Fig. 2-1-25

1-6-12. Cylinder Holding Plate Replacement

1. Remove screws (1) and (2) securing the cylinder holding plate (3) and a screw (5) securing the cylinder holding plate (4).
2. Remove the cylinder holding plate (3) and (4) sliding in the direction shown by the arrow (B) and (A).
3. Eliminate the cylinder lock key (wedge shaped parts).
4. After replacing the cylinder holding plates (3) and (4), mount new parts in the reverse order of removal.

Notes:

- When remounting, fix the cylinder while pushing in the direction shown by the arrow (A) and the cylinder holding plate (3) in the direction shown by the arrow (B). Then tighten three screws while pushing the cylinder holding plate (4) toward the stopper on the outsert of the mechanical deck.
- Tightening order of the screws is (1) → (2) → (5).
- Tightening torque of the screws (1), (2), (5) is 294 – 392 mN•m (3 – 4 kg•cm).

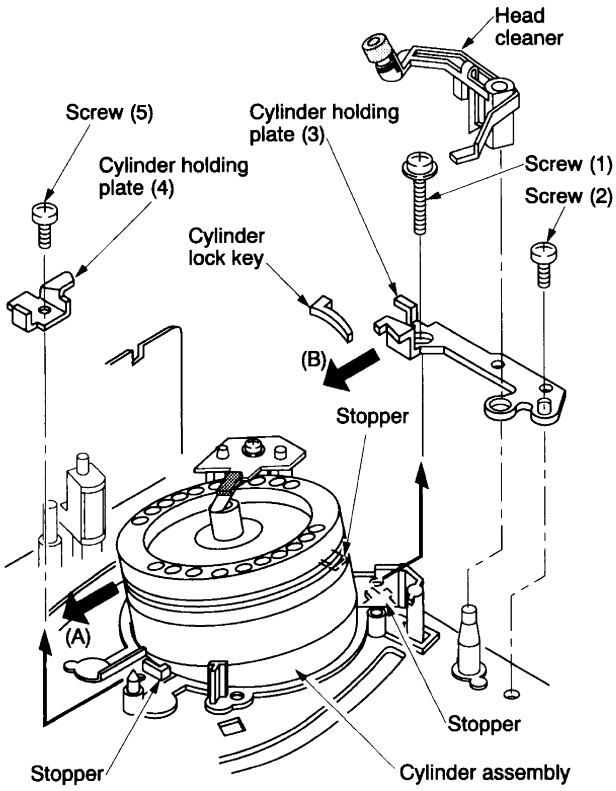

Fig. 2-1-26

1-6-13. Head Cleaner Replacement

<Roller sub assembly replacement>

1. Remove the roller sub cleaner assembly (2) pulling upward from the hook (A) on the cleaner lever (1).
2. After replacing the roller sub assembly, mount in the reverse order of removal.

<Cleaner lever replacement>

1. Undo the hook (B) of the cleaner lever (1) from the mechanical deck, and pull out the cleaner lever (1) upward.
2. Replace the cleaner lever (1) on the roller sub assembly (2), and mount the cleaner lever (1) in the reverse order of removal.

Note:

- Take care the roller sub assembly (2) is not stained with grease or oil.

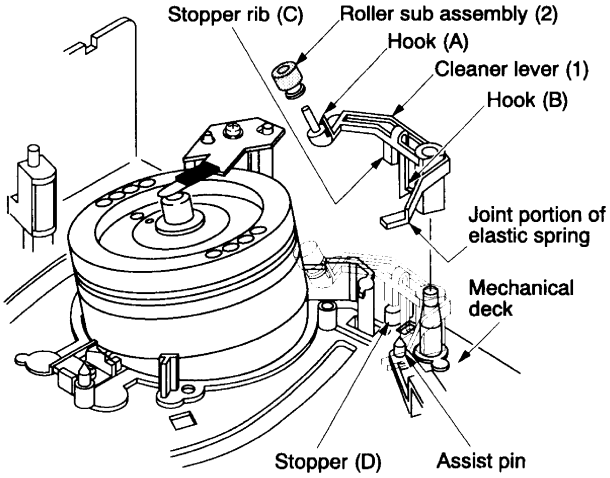

Fig. 2-1-27

Note:

- When remounting the head cleaner, position the stopper rib (C) in front of the stopper (D).

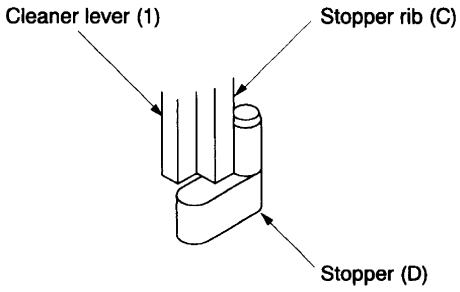

Fig. 2-1-28

Note:

- Confirm that the joint portion (E) of the elastic spring positions in front of the assist pin (F) on the cleaner assist lever (4).

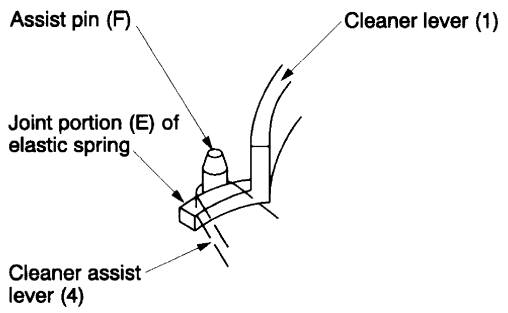

Fig. 2-1-29

1-6-14. No. 8, No. 3 Guide Sleeves Replacement

1. When replacing the No. 8 guide sleeve (1), first remove the guide cap (2) on the loading bracket assembly.
2. Pull out the guide sleeve (1) from the guide post (3).

Note:

- Take care not to break the No. 8, No. 3 guide posts on the mechanical deck if twisting the guide sleeve forcefully.

3. Insert a new guide sleeve (1) to the guide post.

Note:

- When inserting the guide sleeve (1), take care so that its hole faces the opposite side to the tape transport surface.

4. For No. 8 guide sleeve, insert the No. 8 guide cap (2) onto it.

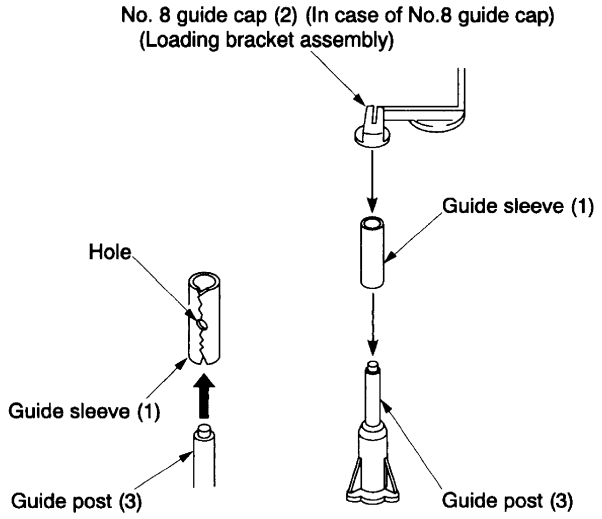

Fig. 2-1-30

1-6-15. ACE Head Assembly Replacement

1. Remove the FFC (1) from the connector.
2. Remove two screws (2) and remove the ACE main base (3) and ACE head assembly (4).
3. Remove three adjusting screws (5), (6), and (7) and then remove the ACE head assembly (4).

Note:

- When replacing ACE head (9) only without replacing its PC board, unsolder the ACE head (9) on the ACE head PC board (8) and then remove the ACE head (9) and the ACE head PC board (8).

4. Mount the ACE head assembly (4) in the reverse order of removal.

Note:

- When reassembling the ACE head assembly (4), First set the ACE springs (10) between the ACE head assembly (4) and the ACE main base (3), and secure the adjusting screws (5), (6), and (7).

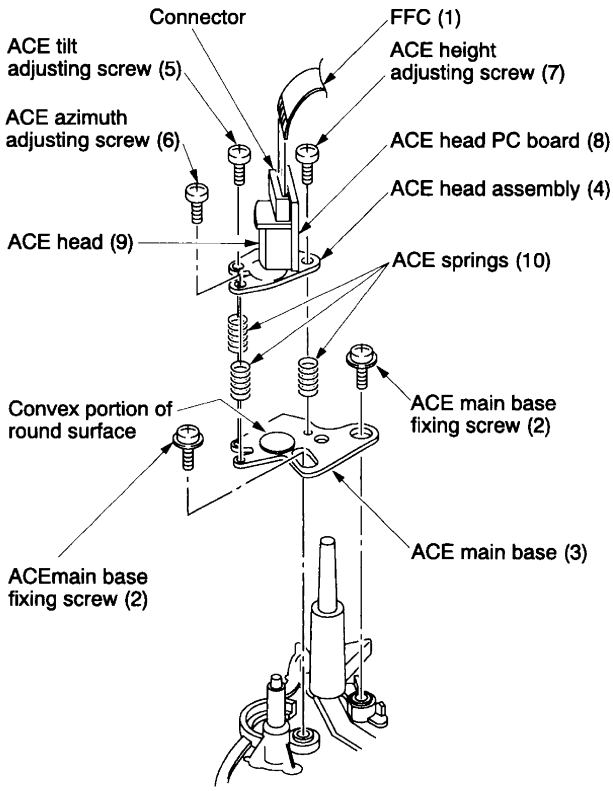

Fig. 2-1-31

- When securing three adjusting screws, mount the ACE main base (3) and ACE head assembly (4) so that the clearance between them becomes parallel with the specified preset value (4.3 ± 0.1 mm).

5. After replacing, perform the tape transport adjustment.

Note:

- When replacing the ACE head assembly (4), always use an ACE head (9) having the same part number. Do not use any other ACE head assembly.

1-6-16. FE Head Replacement

1. Open the FE head holding hook (1) on the mechanical deck slightly in both left and right directions and remove the FE head (2) by moving in the direction shown by the arrows.
2. Replace the FE head (2) and mount the parts in the reverse order of removal.
3. Perform adjustment from the linearity adjustment item in the tape transport system adjustment.

Notes:

- When mounting the FE head, Push the head backward completely.
- Though FE head (2) can be removed upward by opening the FE head holding hook (1) to both left and right directions, perform the standard replacement procedure described above since this may cause deformation of the hook.

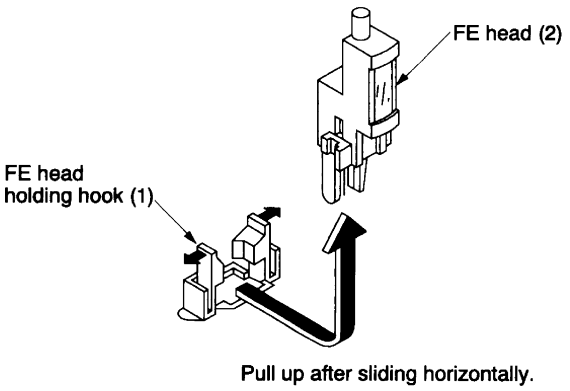

Fig. 2-1-32

1-6-17. S,T Slider Replacement

1. Remove the tension lever assembly. (Refer to item "1-6-22. Tension Lever Assembly Replacement".)
2. Remove the loading slider. (Refer to item "1-6-24. Loading Slider Assembly Replacement".)
3. Remove the S loading assembly. (Refer to item "1-6-23. S Loading Assembly Replacement".)
4. Remove the T loading assembly. (Refer to item "1-6-23. T Loading Assembly Replacement".)
5. Remove the S slider (1) and T slider (2) lifting up to the cutout of the groove on the mechanical deck (3).
6. Remove the S and T guide rollers and mount a new slider.
7. Mount the parts in the reverse order of removal.

Note:

- Perform the phase alignment between the loading slider (4) and S, T loading assemblies (5), (6) referring each replacement procedure.

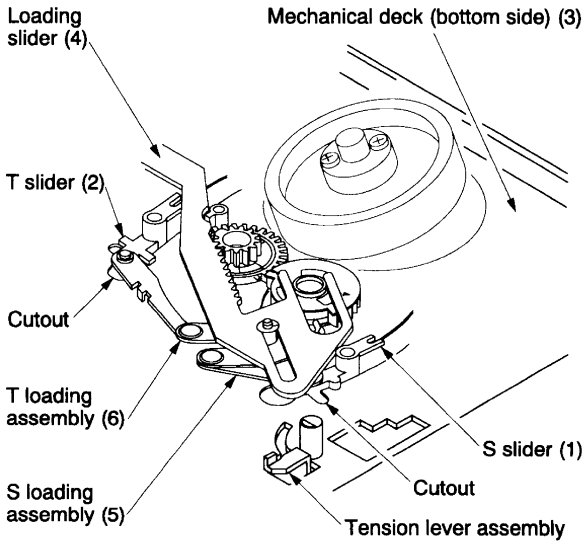

Fig. 2-1-33

8. After completion of the replacement, perform the adjustment from item 1 in the tape transport system adjustment.

1-6-18. S,T Guide Rollers Replacement

The same replacement procedures will be applied for the S, T guide rollers.

1. Turn the guide roller (1) counterclockwise and remove the guide roller (1) from the slider assembly (2).
2. Mount a new guide roller on the slider assembly (2) turning clockwise.
3. After completion of the replacement, perform the adjustment from the linearity adjustment in the tape transport system adjustment..

Notes:

- O ring is not applied to the T guide roller.
- For the T guide roller, marking is located on the upper flange. So take care not to mis-mount with the S guide roller.

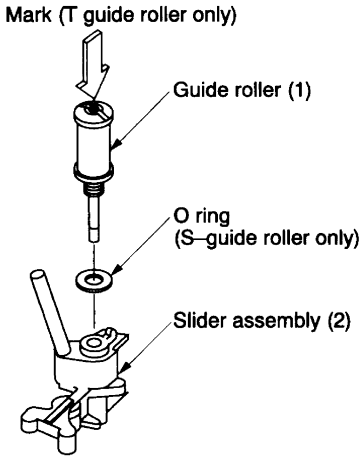

Fig. 2-1-34

1-6-19. S,T Impedance Roller Replacement

1. Remove two screws (1) and (2), and then remove two brackets (3), (4).
2. Replace two impedance rollers (5), (6).
3. Mount the parts in the reverse order of removal.
4. After completion of the replacement, perform the adjustment from the linearity adjustment in the tape transport system adjustment.

Note:

- S, T impedance rollers (5), (6) is not always applied to all models.

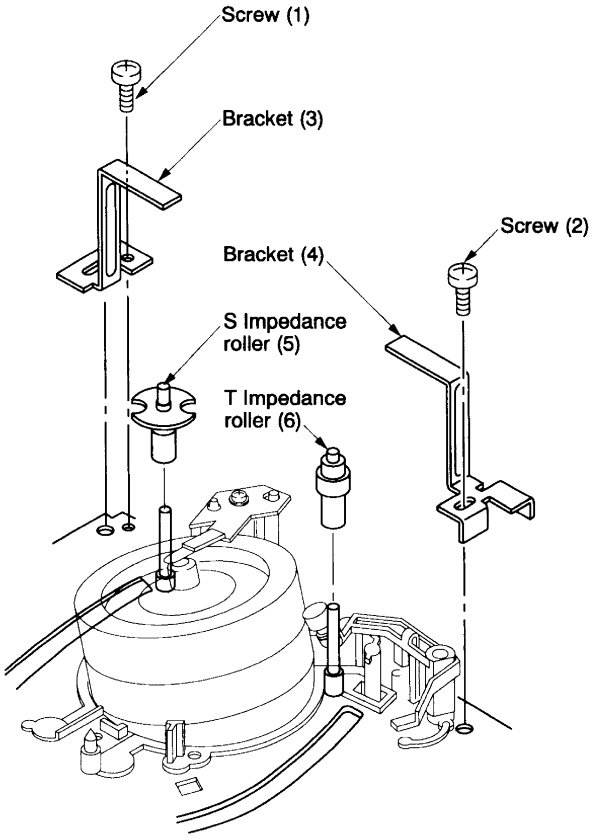

Fig. 2-1-35

1-6-20. Pinch Roller Assembly Replacement

1. Remove the loading drive assembly (Refer to item "1-6-28. Loading Drive Assembly Replacement".)
2. Remove the pinch assembly (1) lifting vertically from the pinch post (2).
3. Remove the pinch spring (5) from the hooks on the pinch drive assembly (3) and the pinch lever assembly (4).
4. Turn the projection (A) on the pinch drive assembly (3) counterclockwise till it goes to the cutout on the pinch lever assembly (4).
5. After replacing, mount the parts in the reverse order of removal.
6. After completion of the replacement, perform the tape transport adjustment.

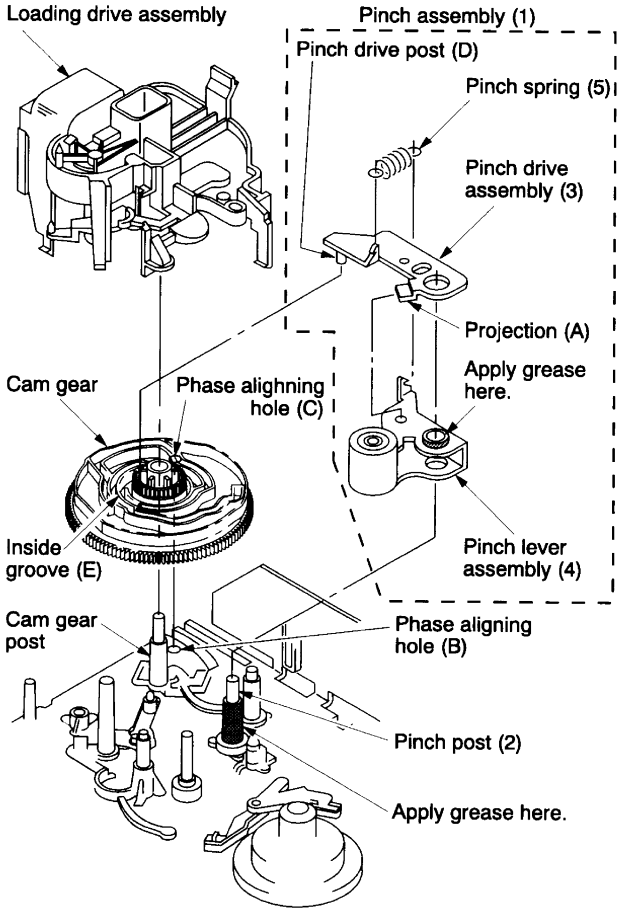

Fig. 2-1-36

Notes:

- For the removal and assembling of the loading drive assembly, refer to item 1-6-28.
- When inserting the pinch assembly (1) into the pinch post (2), insert it so that the pinch drive post (D) enters the groove (E) inside the cam gear.
- Take care not to touch the surface of the pinch roller and the grease is not stained on it.
- Be sure to apply grease to the surface of the bar-ring on the pinch lever assembly (4) and the pinch post (2) on the mechanical deck.

1-6-21. No. 9 Guide Lever Assembly Replacement

1. Remove the loading drive assembly. (Refer to item "1-6-28. Loading Drive Assembly Replacement".)
2. Remove the drive lever. (Refer to item "1-6-39. Drive Lever Replacement".)
3. Remove the pinch assembly. (Refer to item "1-6-20. Pinch Roller Assembly Replacement".)
4. Remove the ACE head assembly. (Refer to item "1-6-15. ACE Head Assembly Replacement".)
5. Remove the cam gear (2) from the cam gear post (1).
6. Remove the T soft brake spring (3).
7. Remove the No. 9 guide lever assembly (4) lifting the No. 9 guide lever assembly upward from the No. 9 guide post (5).
8. After replacing, mount the parts in the reverse order of removal.
9. After completion of the replacement, perform the tape transport adjustment.

Notes:

- When mounting the No. 9 guide lever assembly (4), confirm that (A) side of the No. 9 guide lever assembly (4) touches the capstan motor housing portion.
- After inserting the No. 9 guide lever assembly (4) into the No. 9 guide post (5), confirm that the lower projection of the No. 9 guide lever assembly (4) touches to the upper surface of the mechanical deck.
- Take care that the grease is not stained on the No. 9 guide post of the No. 9 guide lever assembly (4).
- Be sure to apply grease to the No. 9 guide post (5).

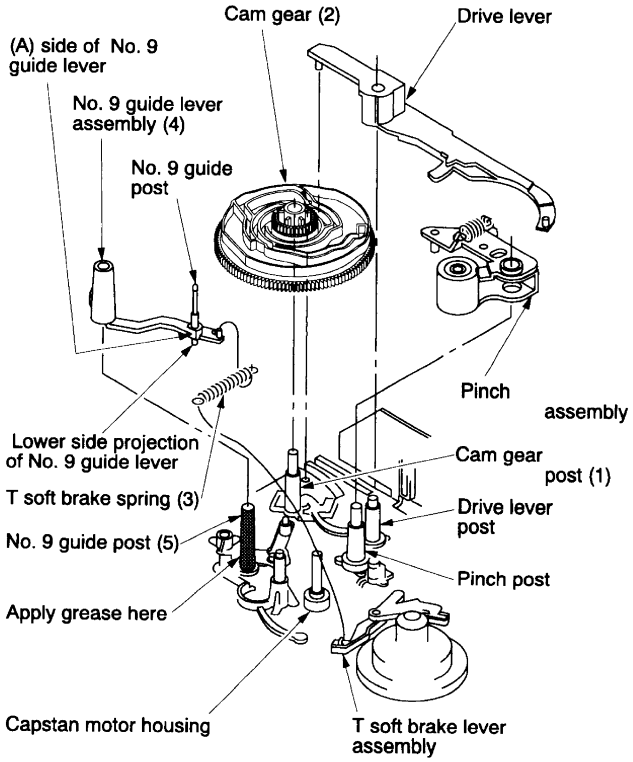

Fig. 2-1-37

1-6-22. Tension Lever Assembly, Band Holder and Band Brake Replacement

1. Remove the tension spring (1).

Note:

- Take care not to extend or deform the tension spring.

2. After setting the band brake adjuster to the band holder assembling position, undo the claw of the snap-fit type and remove the band holder from the band brake adjuster by lifting it upward.

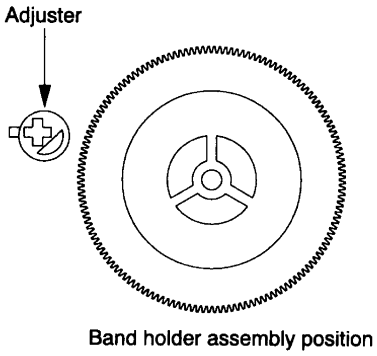

Fig. 2-1-38 Detail of band holder assembling

3. Undo the claw of the outsert on the mechanical deck catching the shaft of the tension lever assembly (3) and remove the tension lever assembly lifting it upward.
4. Remove the band brake (5) from the reel table while pulling the S soft brake lever (4) in the direction shown by the arrow.
5. Remove the band brake (5) from the hook on the tension lever assembly (3).

Note:

- Take care not to contaminate, bend or damage the felt surface on the band brake (5).

6. After replacing the tension lever assembly (3), clean the shaft on the tension lever and apply a few amount of oil.
7. Mount the parts in the reverse order of the removal.
8. After mounting, check the tension post position and perform the adjustment and back tension check.
9. After completion of the replacement, perform the adjustment from the linearity adjustment in the tape transport system adjustment.

Notes:

- The band holder (2) can be replaced in the procedures described above steps 1 to 3.
- The band brake (5) can be replaced in the procedures described above steps 1 to 5.
- When replacing the band holder (2) and band brake (5), the linearity adjustment is not necessary.

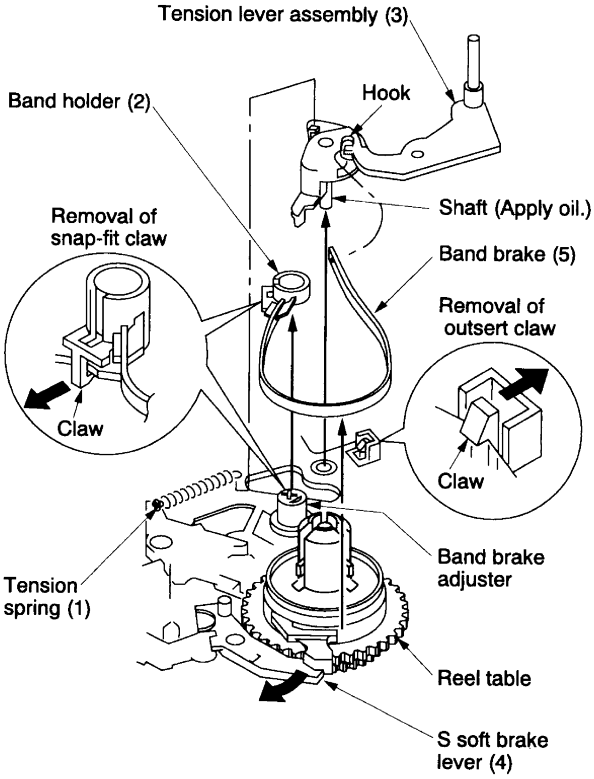

Fig. 2-1-39

1-6-23. S,T Loading Assembly Replacement

1. Remove the mechanical deck assembly from the main PC board.
2. Set the mechanical position to the F/L out position (front side). Turn over the mechanical deck.
3. Remove the loading slider assembly. (Refer to item "1-6-24. Loading Slider Assembly Replacement".)

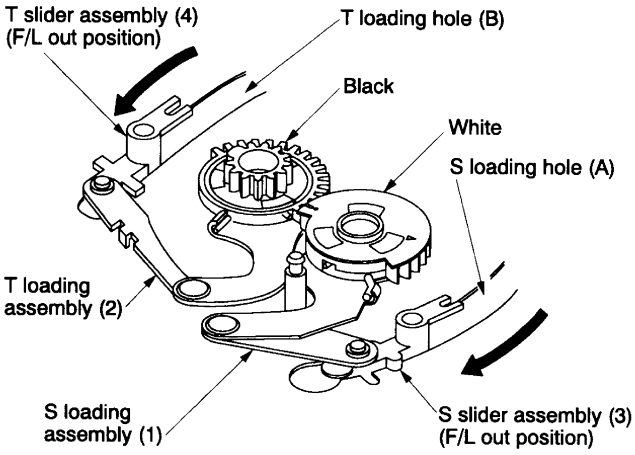

Fig. 2-1-40

4. Remove the S, T loading assemblies (1), (2).
5. Insert the S, T slider assemblies (3), (4) along the cutout of the S, T loading holes (A) and (B) on the mechanical deck and set the S, T slider assemblies (3), (4) to the loading position (rear side).
6. Insert the T loading assembly (2) to the post (C) on the T slider assembly (4) and the post (D) on the mechanical deck. And insert the S loading assembly (1) to the post (E) on the S slider assembly (3) and the post (F) on the mechanical deck.

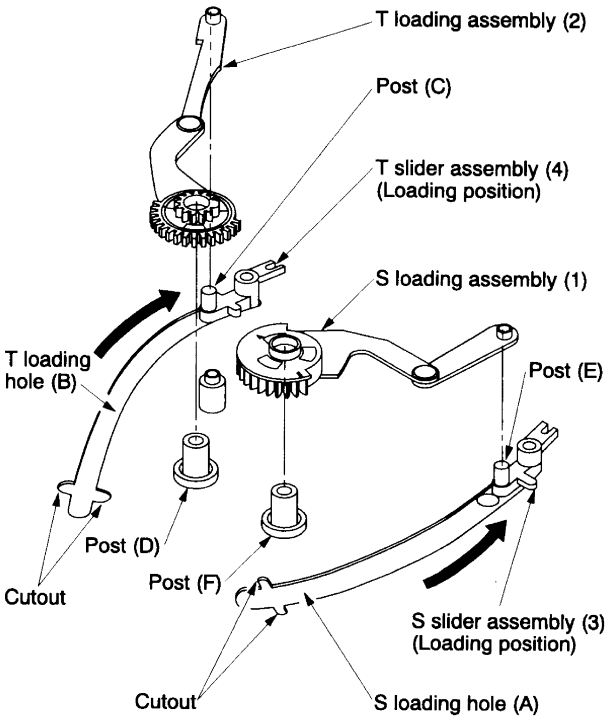

Fig. 2-1-41

Note:

- Align the phases of the ▲ marks on the S, T loading gear (1), (2).

7. Set the S, T slider assemblies (3), (4) to the F/L out position.

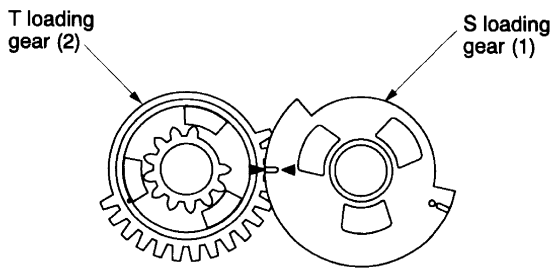

Fig. 2-1-42

1-6-24. Loading Slider Assembly Replacement

1. Remove the mechanical deck from the main PC board.
2. Set the mechanical position to the F/L out position.
3. Turn over the mechanical deck.
4. Remove the stop ring (1).
5. Remove the loading slider assembly (2) while lifting its tip upward using the mold portion on the loading slider assembly (2) as a fulcrum.
6. Mount the parts in the reverse order of removal.

Notes:

- When mounting the loading slider assembly (2), insert the tip of the loading slider assembly (2) slightly to the mold portion, then mount it so that the claw on the outsert is in the position of the cutout portion of the loading slider assembly.
- Confirm that the position mark on the loading slider assembly (2) and the mark on the T loading gear match each other in position.

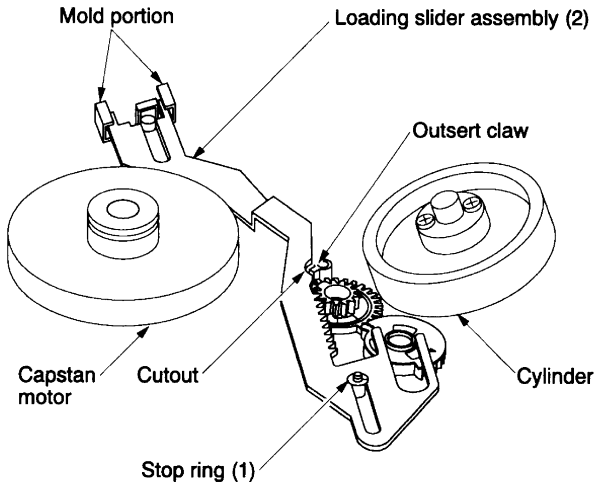

Fig. 2-1-43 View from mechanical deck bottom side

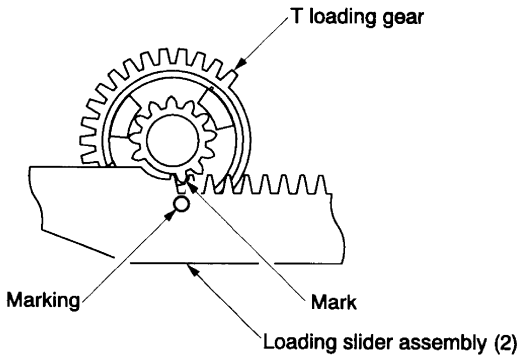

Fig. 2-1-44

1-6-25. Hook Lever Assembly Replacement

1. Remove the top bracket. (Refer to item "1-6-1. Top Bracket Replacement".)
2. Remove the cassette holder assembly. (Refer to item "1-6-2. Cassette Holder Replacement".)
3. Remove the drive arm assembly. (Refer to item "1-6-5. Drive Arm Assembly Replacement".)
4. Remove the tension spring (1).
5. Turn the hook lever assembly (2) counterclockwise slightly, and remove the claw on the hook lever assembly (2) then replace.
6. After replacing the hook lever assembly (2) , insert the (A) portion of the hook lever under the S reel table assembly. When the portions (B), (C), (D) are in line, push the claw into the mechanical deck.

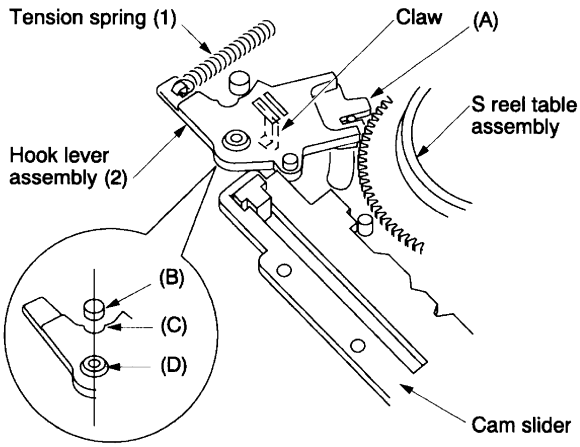

Fig. 2-1-45

7. Turn the hook lever assembly (2) clockwise till it stops, and mount the tension spring (1). After replacing the hook lever assembly (2), slide the cam slider in the direction shown by the arrow, and then position the boss (E) under the cam slider.

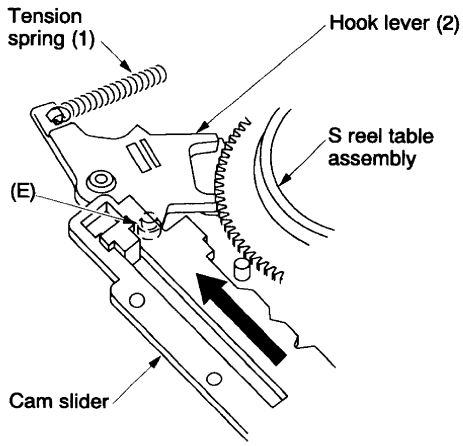

Fig. 2-1-46

1-6-26. Hook Replacement

1. Remove the hook lever assembly. (Refer to item "1-6-25. Hook Lever Assembly Replacement".)
2. Turn over the hook lever assembly (1) and remove the hook lever assembly (1) opening the portion (A) of the hook (2) slightly and lifting the hook (2) upward.
3. When mounting a new hook, push the hook (2) in the portion (B) from above.

Note:

- Take care not to confuse the mounting direction of the hook (2).

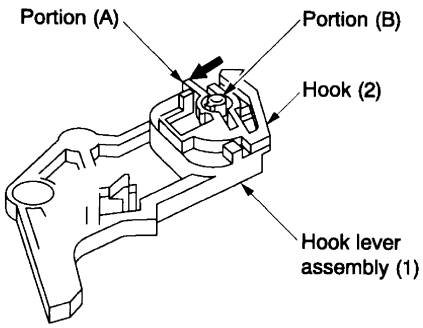

Fig. 2-1-47

1-6-27. Tension Drive Lever Replacement

1. Remove the cam slider. (Refer to item "1-6-40. Cam Slider Replacement".)
2. Turn over the mechanical deck and remove the tension drive lever (1) from the projection (A) moving counterclockwise slightly.
3. After replacing the tension drive lever (1) , mount in the reverse order of removal.

Note:

- For the cam slider mounting, refer to the notes in item 1-6-40.

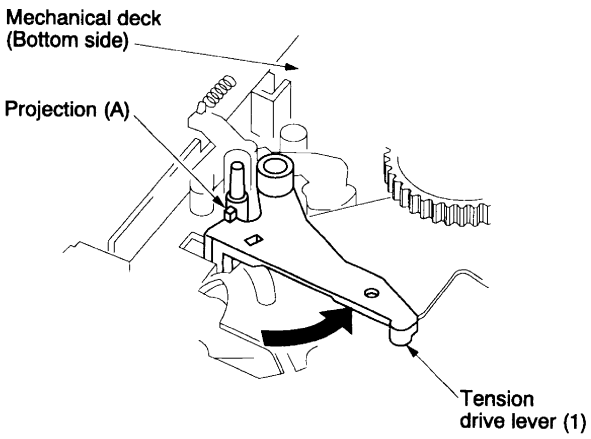

Fig. 2-1-48

1-6-28. Loading Drive Assembly Replacement

1. Remove the F/L ground plate and the head cleaner assembly. (Refer to item "1-6-13. Head Cleaner Assembly Replacement".)
2. Remove two flat cables (1) from the connectors.
3. Pull out the portion (A) (No. 8 guide cap) from the motor bracket (2).
4. Remove four claws (a), (b), (c), (d) securing the motor bracket in the order of (a) → (b) → (c) → (d).

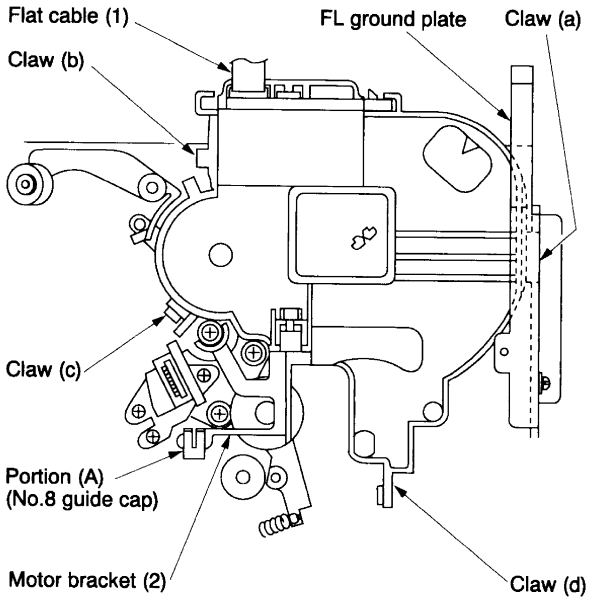

Fig. 2-1-49

Notes:

- Remove the claw (a) inserting a driver.
- Remove the claws (b) and (c) pushing inside previously and opening the claws slightly.

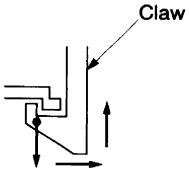

Fig. 2-1-50

<Preparation for loading drive assembly mounting >

a) Confirm that the head cleaner assembly is removed.

b) Confirm that the small hole b) on the cam gear aligns with the hole on the mechanical deck.

c) Confirm that the clearance between the pinch lever assembly and the cam gear is approx. 0.3 mm. (Confirm that the pinch lever assembly is correctly mounted on the groove of the cam gear.)

d) Confirm that the clearance between the drive lever and the cam gear is approx. 2 mm. (Confirm that the drive lever is correctly mounted on the groove of the cam gear.)

e) Confirm that the Δ mark on the rotor of the cam switch aligns with the Δ mark on the motor bracket.

5. After completion above steps a) to e), mount the loading drive assembly. Push four claws to the motor bracket in the order of (d) → (c) → (b) → (a) and push the portion (A) (No. 8 guide cap) into the motor bracket.

6. Confirm that the Δ mark on the rotor of the cam switch aligns with that on the bracket when the hole b) on the cam gear aligns with the hole on the mechanical deck. If the alignment of the Δ marks cannot be confirmed, remove loading drive assembly once again and reinstall after confirming the above steps a) to e).

7. Mount two flat cables.

8. Mount the F/L ground plate and the head cleaner assembly.

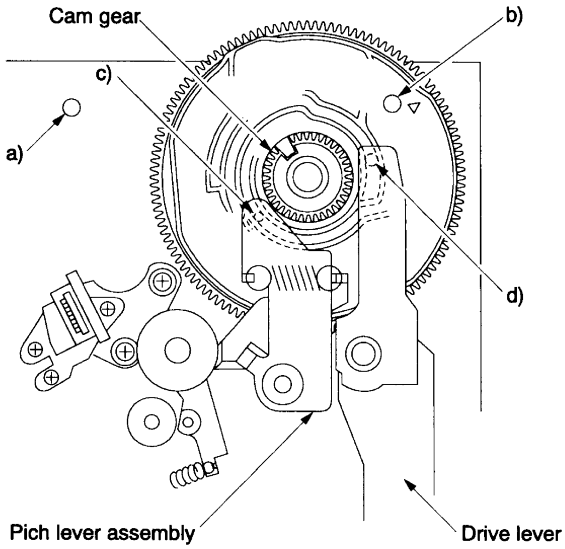

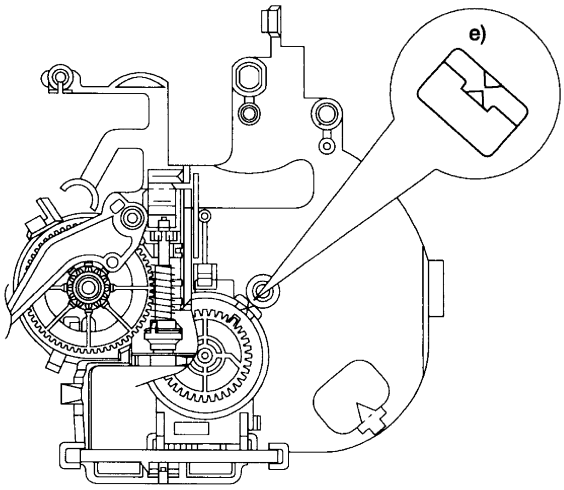

Loading drive assembly bottom side

Fig. 2-1-51

1-6-29. Loading Motor Sub Assembly, Cam Switch and Loading Drive Unit Replacement

1. Remove the loading drive assembly. (Refer to item "1-6-28. Loading Drive Assembly Replacement".)
2. Remove the cleaner assist lever (1) from the claw (A).
3. After removing the cleaner assist lever (1), the worm wheel can be also removed upward.
4. Insert a slot-type screwdriver into the portion (C) of the loading drive bracket (3) and push the loading motor 2 – 3 mm lower. And push the tip of worm gear from the portion (D) of the loading bracket (3), then remove the worm gear (4) from the claw (E).
5. Remove the cam switch (5) from the claw (F) on the loading drive bracket (3) and pull out the loading drive unit (7) and the worm gear (4) simultaneously.
6. Replace the loading drive unit (7). When mounting the PC boards of the cam switch (5) and the loading drive unit (7), take care that no clearance is allowed.
7. Insert the loading drive unit (7) and the worm gear (4) into the loading drive bracket (3).
8. Push the tip (G) of the worm gear (4) into the claw (E) on the loading motor bracket.
   In this process, take care not to bend the tip of the worm gear with strong pressure.
9. Push the cam switch (5) into the claw (F) on the loading motor bracket.
10. Mount the parts in the reverse order of removal.

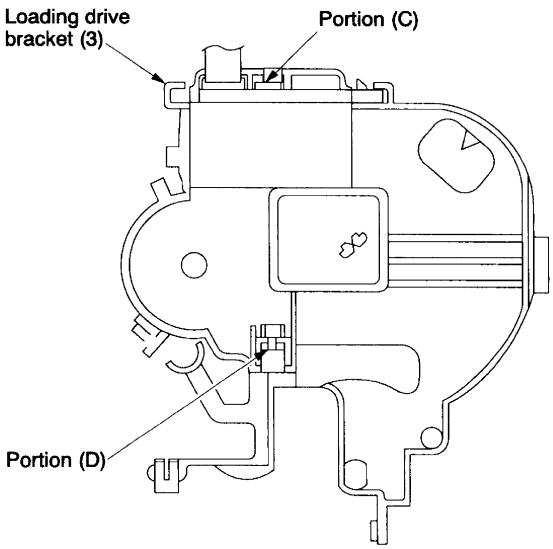

Loading drive assembly (Top Side)

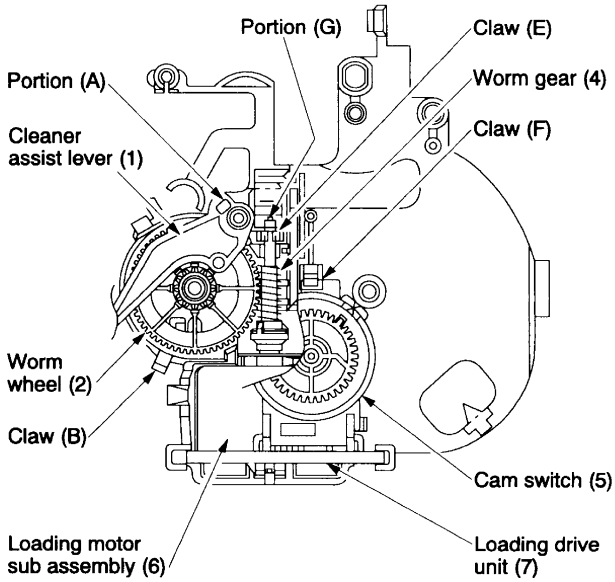

Loading drive assembly (Bottom side)

Fig. 2-1-52

1-6-30. Cam Gear Replacement

1. Remove the loading drive assembly. (Refer to item "1-6-28. Loading Drive Assembly Replacement".)
2. Remove the cam slider. (Refer to item "1-6-40. Cam Slider Replacement".)
3. Remove the drive lever. (Refer to item "1-6-39. Drive Lever Replacement".)
4. Remove the pinch roller assembly. (Refer to item "1-6-20. Pinch Roller Assembly Replacement".)
5. Remove the cam gear.
6. Apply grease on a new cam gear on the shaded portion as shown in Fig. 2-1-53 and the shaft of the main base.

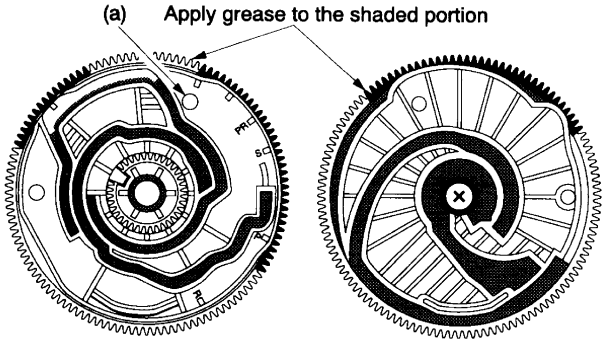

Fig. 2-1-53

7. Make the S, T slider to the slot out condition.
8. Push the cam lever (1) and the pin (2) (loading slider) in the direction shown by the arrows (A) and (B).
9. Mount the cam gear at the angle which the small hole (a) on the cam gear aligns with the hole on the mechanical deck. (Refer to Fig. 2-1-53.)

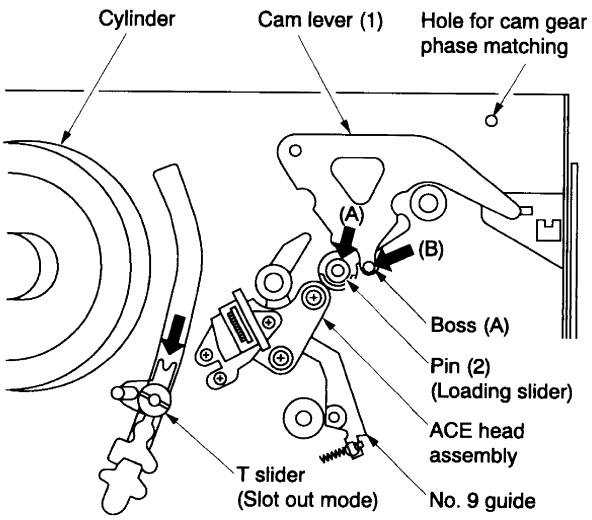

Fig. 2-1-54

10. Mount the parts in the reverse order of removal.

1-6-31. S Reel Table Assembly and Washer 2 Replacement

1. Remove the top bracket and the cassette holder assembly. (Refer to item "1-6-1. Top Bracket Replacement and 1-6-2. Cassette Holder Assembly Replacement".)
2. Remove the drive arm assembly. (Refer to item "1-6-5. Drive Arm Assembly Replacement".)
3. Remove the cam slider. (Refer to item "1-6-40. Cam Slider Replacement".)
4. Remove the S soft brake and S main brake assembly. (Refer to item "1-6-37. S Soft Brake Replacement and 1-6-36. S Main Brake Assembly Replacement".)
5. Remove the tension lever assembly. (Refer to item "1-6-22. Tension Lever Assembly Replacement".)
6. Remove the S reel table assembly (1) pulling it out upward.
7. Remove the washer 2 (2).
8. After cleaning the reel shaft (3) with a cleaning kit, insert a new washer 2 (2) to the reel shaft (3) and apply a drop of oil to the shaded portions (two locations) on the reel shaft (3).
9. After replacing, mount the parts in the reverse order of removal.
10. Confirm the reel torque using a torque cassette.

Note:

- The washer 2 (2) can use repeatedly.

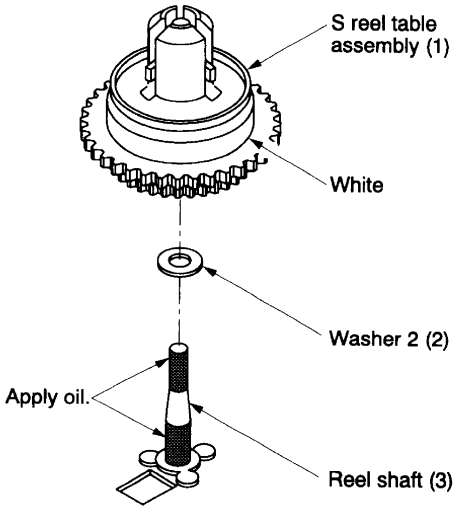

Fig. 2-1-55

1-6-32. T Reel Table Assembly and Washer 2 Replacement

1. Remove the top bracket and the cassette holder assembly. (Refer to item "1-6-1. Top Bracket Replacement and 1-6-2. Cassette Holder Assembly Replacement".)
2. Remove the drive arm assembly. (Refer to item "1-6-5. Drive Arm Assembly Replacement".)
3. Remove the T soft brake and T main brake assembly (Refer to item "1-6-40. Cam Slider Replacement".)
4. Remove the T reel table assembly (1) pulling it out upward.
5. Remove the washer 2 (2).
6. After cleaning the reel shaft (3) with a cleaning kit, insert a new washer 2 (2) to the reel shaft (3) and apply a drop of oil to the shaded portions (two locations) on the reel shaft (3).
7. After replacing, mount the parts in the reverse order of removal.
8. Confirm the reel torque using a torque cassette.

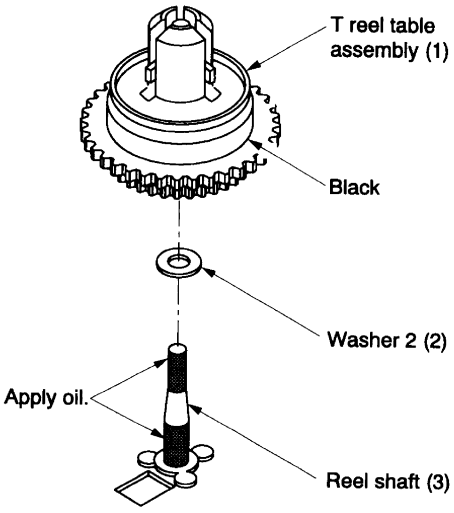

Fig. 2-1-56

Note:

- Washer 2 (2) can use repeatedly.

1-6-33. Idle Arm Assembly Replacement (Center Gear Pulley, Idle Kick Lever, Idle up/down Lever)

1. Remove the mechanical deck from the main PC board.
2. Remove the stop ring (1) turning over the mechanical deck.
3. Remove the center gear pulley (2) lifting it upward.
4. Remove the claw (A) on the idle kick lever (3) moving and pulling it upward.
5. Remove the slit washer (4).
6. Remove the idle up/down lever (5) and the idle arm (6) simultaneously from two claws (B) on the mechanical deck.
7. After cleaning the center gear post (7) using a cleaning kit, apply a few drops of oil to the shaded portion on the center gear post.
8. Mount the parts in the reverse order of removal.

Notes:

- Stop ring (1) is impossible to use again.
- When mounting the parts, take care of the notice shown in Fig. 2-1-58.

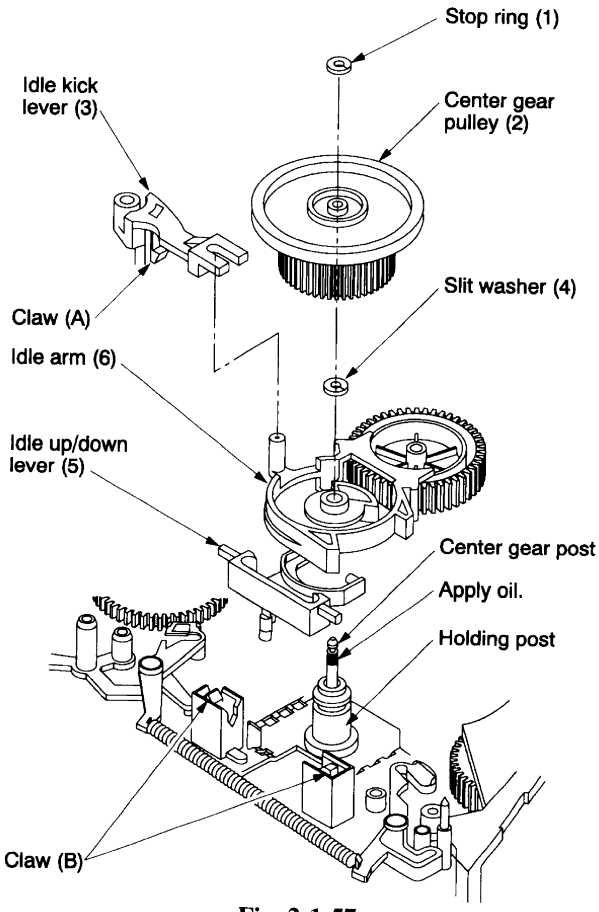

Fig. 2-1-57

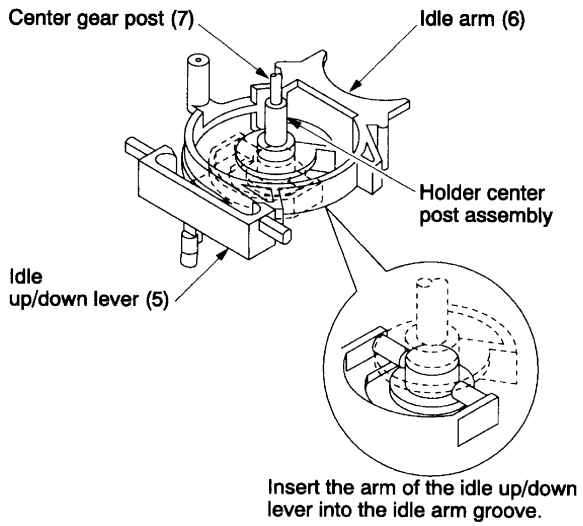

Fig. 2-1-58

1-6-34. Holder Center Post Assembly Replacement

1. Turn over the mechanical deck and remove the center gear pulley and the idle arm. (Refer to item "1-6-33. Idle Arm Assembly Replacement".)
2. Turn over the mechanical deck and remove the top bracket and the cassette holder assembly. (Refer to item "1-6-1. Top Bracket Assembly Replacement and 1-6-2. Cassette Holder Assembly Replacement".)
3. Remove the drive arm assembly. (Refer to item "1-6-5. Drive Arm Assembly Replacement".)
4. After removing two screws (1), replace the holder center post assembly (2).
5. After replacing, mount the parts in the reverse order of removal.

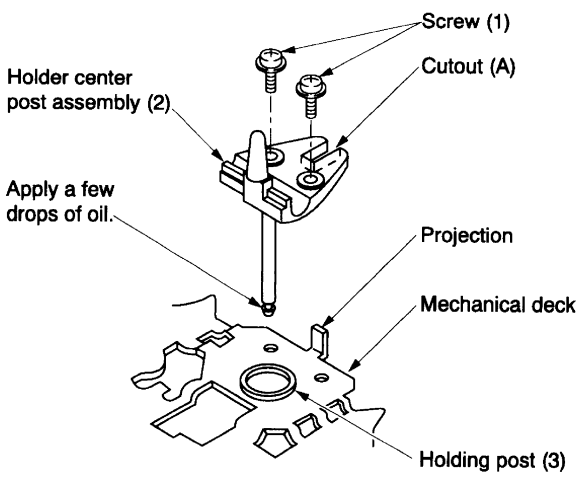

Fig. 2-1-59

Notes:

- When mounting, push the cutout (A) on the holder center post assembly (2) aligning with the projection on the mechanical deck.
- Screw tightening torque is 294 – 392 mN•m (3 – 4 kg•cm).
- Before mounting the center gear pulley, apply a few drops of oil. (Refer to Fig. 2-1-57.)

1-6-35. REC Inhibiting Lever Replacement

1. Remove the top bracket. (Refer to item "1-6-1. Top Bracket Replacement".)
2. Remove the cassette holder assembly. (Refer to item "1-6-2. Cassette Holder Assembly Replacement".)
3. Remove the cam slider. (Refer to item "1-6-40. Cam Slider Replacement".)
4. Remove the tension spring (2).
5. Undo the claw (A) on the S soft brake (1) sliding and lifting it upward.
6. Remove the projection (B) on the REC inhibiting lever (3) sliding in the direction shown by the arrow and lifting it upward.
7. After replacing the REC inhibiting lever (3), mount the parts in the reverse order of removal.

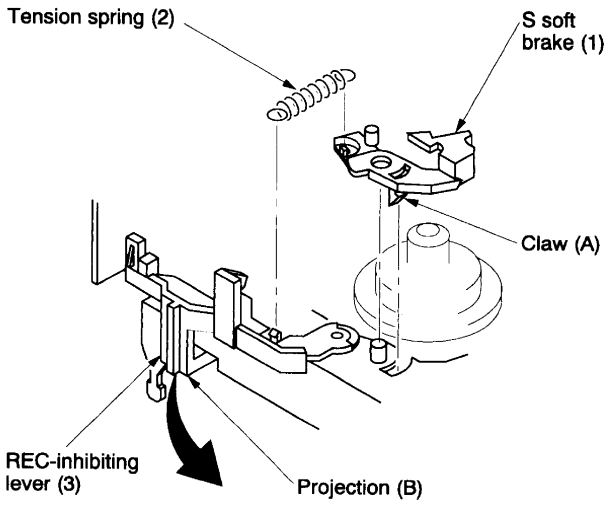

Fig. 2-1-60

1-6-36. S,T Main Brake Assembly Replacement

1. Remove the mechanical deck from the main PC board and turn the mechanical deck upside down.
2. When replacing the T main brake assembly (2), first remove the idle kick lever (3). (Refer to item "1-6-33. Idle Arm Assembly Replacement".)
3. Remove the tension spring (4).
4. Remove the claws on the S, T main brakes (1), (2) from the mechanical deck lifting the S, T main brakes (1), (2) upward.
5. After replacing the S, T Main brake assemblies (1), (2), mount the parts in the reverse order of removal.

Note:

- When mounting the S, T main brake assemblies (1), (2) take care that both ends of the S, T main brakes (1), (2), do not touch the gear of the reel table.

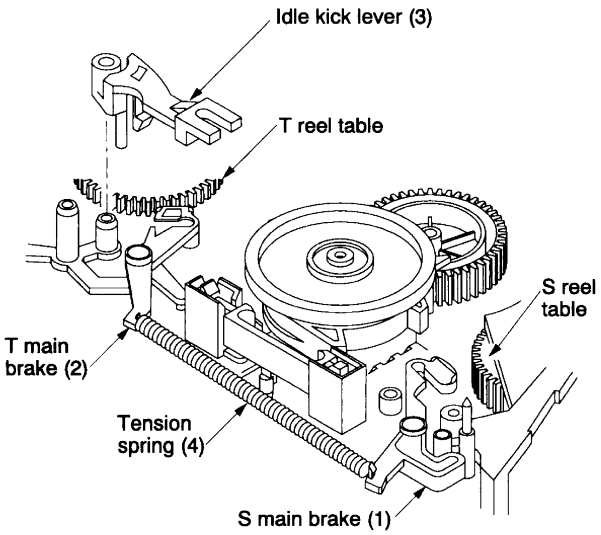

Fig. 2-1-61

1-6-37. S Soft Brake Replacement

1. Remove the cam slider. (Refer to item "1-6-40. Cam Slider Replacement.")
2. Remove the drive arm assembly. (Refer to item "1-6-5. Drive Arm Assembly Replacement".)
3. Remove the S soft brake spring (1).
4. Remove the S soft brake (2) after removing the claw (A) on the S soft brake from the mechanical deck.

Notes:

- When mounting the S soft brake spring (1), take care not to deform the hook (B).
- When mounting the S soft brake (2), take care of the band brake (3).

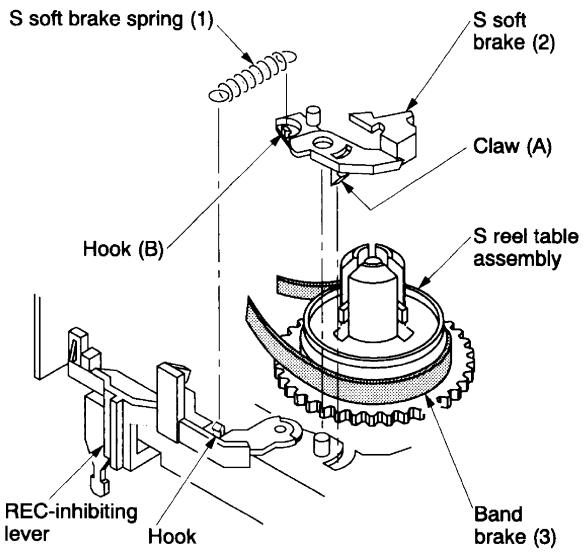

Fig. 2-1-62

1-6-38. T Soft Brake Replacement

1. Remove the T soft brake spring (1).
2. Remove the claw (A) on the T soft brake (2) from the mechanical deck and remove the T soft brake (2).
3. After replacing the T soft brake (2), mount the parts in the reverse order of removal.

Notes:

- When mounting the T soft brake spring (1), take care not to deform the hook (B).
- Take care not to touch the surface (C) on the brake pad.

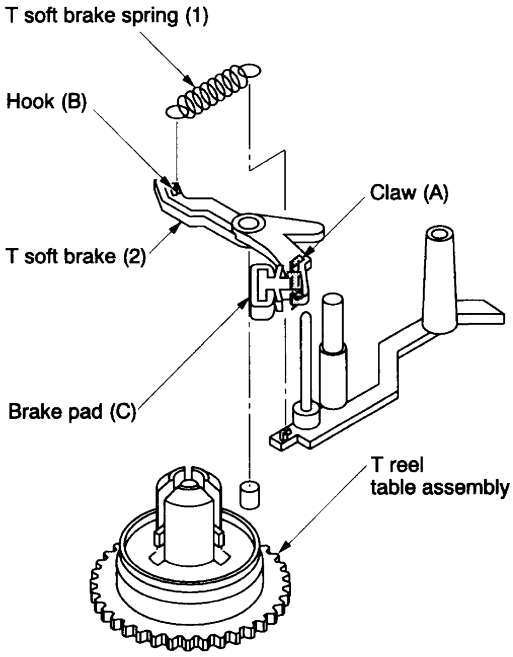

Fig. 2-1-63

1-6-39. Drive Lever Replacement

1. Remove the top bracket. (Refer to item "1-6-1. Top Bracket Replacement".)
2. Remove the cassette holder assembly. (Refer to item "1-6-2. Cassette Holder Assembly Replacement".)
3. Remove the drive arm assembly. (Refer to item "1-6-5. Drive Arm Assembly Replacement".)
4. Remove the cam slider. (Refer to item "1-6-40. Cam Slider Replacement".)
5. Remove the Loading Drive Assembly. (Refer to item "1-6-28. Loading Drive Assembly Replacement.")
6. Remove the drive lever (1).
7. After replacing the drive lever (1), mount the parts in the reverse order of removal.

Notes:

- Be sure to align the phase of the cam gear (2). (Refer to item 1-6-40. Cam Slider Replacement".)
- Mount the drive lever (1) so that it is positioned between the mark (A) on the mechanical deck and the outsert (B).
- Apply grease to the surface between the mark (C) on the mechanical deck and the drive lever shaft (D).

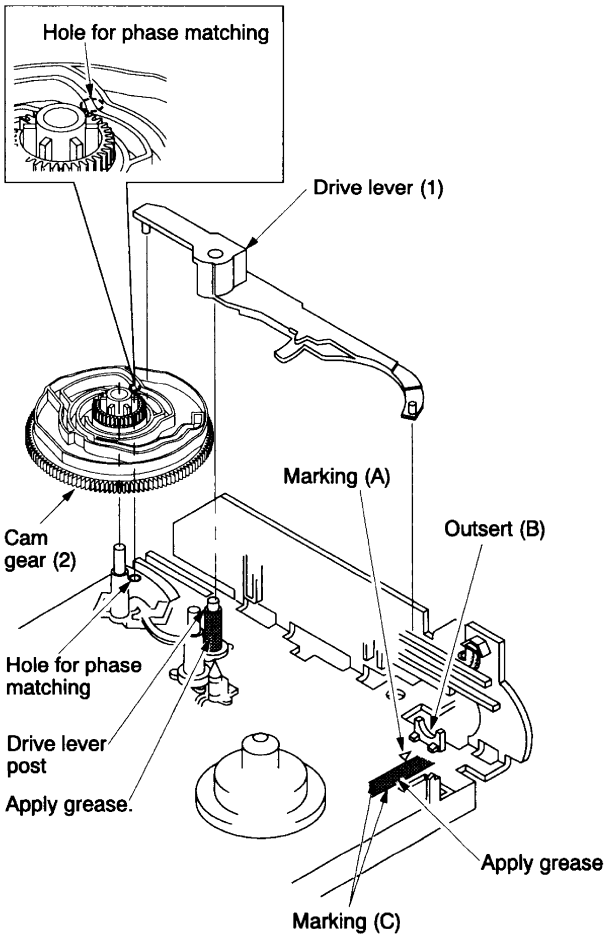

Fig. 2-1-64

1-6-40. Cam Slider Replacement

1. Remove the top bracket and the cassette holder assembly. (Refer to item "1-6-1. Top Bracket Replacement and 1-6-2. Cassette Holder Assembly Replacement".)
2. Remove the tension spring (1).
3. Turn the hook lever assembly (2) counterclockwise and turn the S soft brake (3) counterclockwise.
4. Move the cam slider (4) to the right and align the projection (A) on the mechanical deck and the cutout portion (B) on the cam slider (4).
5. Remove the claw (C) on the cam slider (4) and remove the cam slider (4) lifting the cam slider (4) upward.

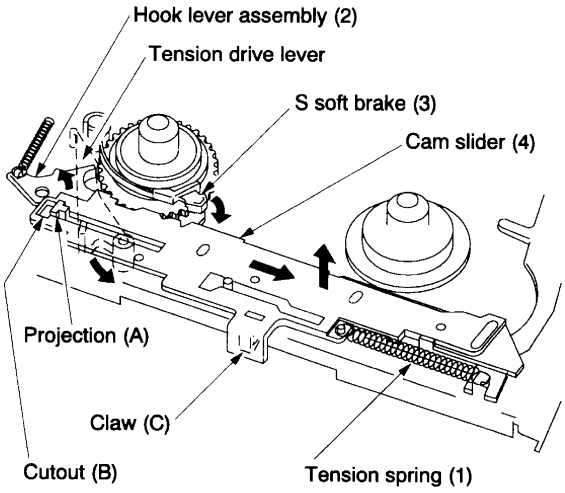

Fig. 2-1-65

6. Apply grease on the shaded portion of a new slider for the replacement.
7. Mount the parts in the reverse order of removal. After inserting the cam slider, slide it to the left direction till it stops. (Fig. 2-1-46 shows this condition.)

Notes:

- When mounting the cam slider (4), slide the tension drive lever in the direction shown by the arrow (counterclockwise).
- After completion of the replacement, confirm that the cam slider (4) can slide to left and right directions smoothly.

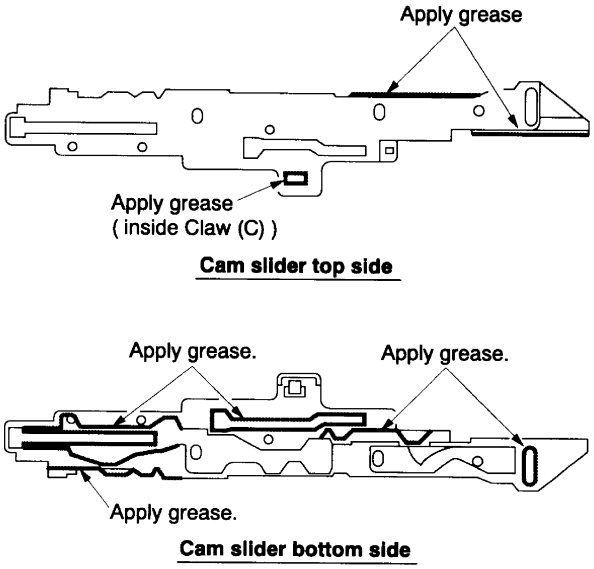

Fig. 2-1-66

1-6-41. Idle Centering Lever Replacement

1. Remove the cam slider. (Refer to item "1-6-40. Cam Slider Replacement".)
2. Remove the claw on the idle centering lever (1) and remove the idle centering lever (1) lifting it upward.
3. After replacing the idle centering lever (1), mount the part in the reverse order of removal.

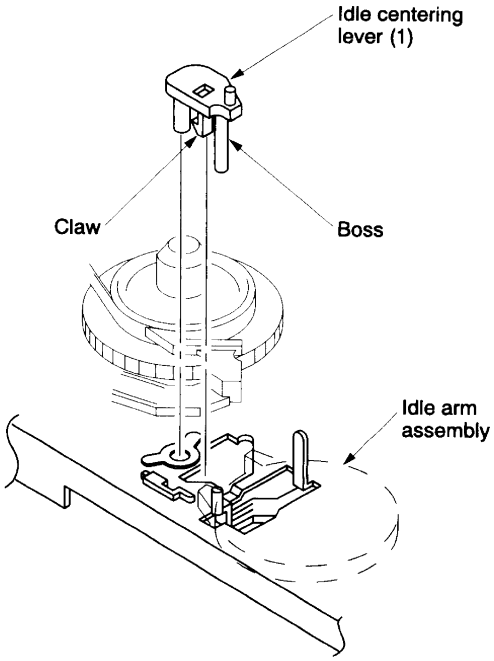

Fig. 2-1-67

1-6-42. Capstan Motor Replacement

1. Remove the reel belt (1).
2. Remove one screw (2) from the bottom of the mechanical deck, and remove the PC board (3).

Note:

- Take care not to misuse the screw with others.

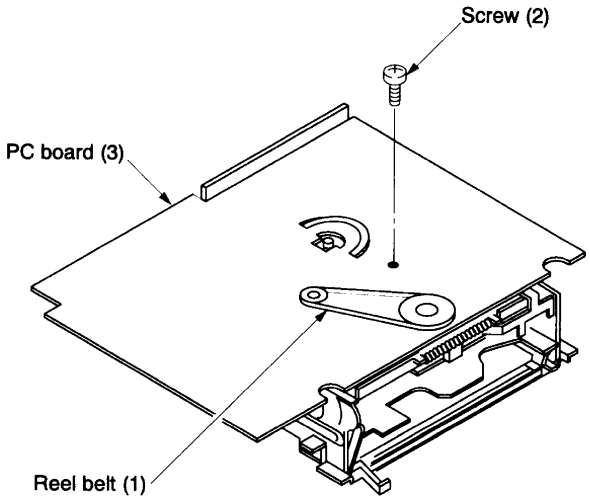

Fig. 2-1-68 View from mechanism deck bottom side

3. Remove the capstan motor (4) after removing three screws (5).

Note:

- Take care not to drop the capstan motor.

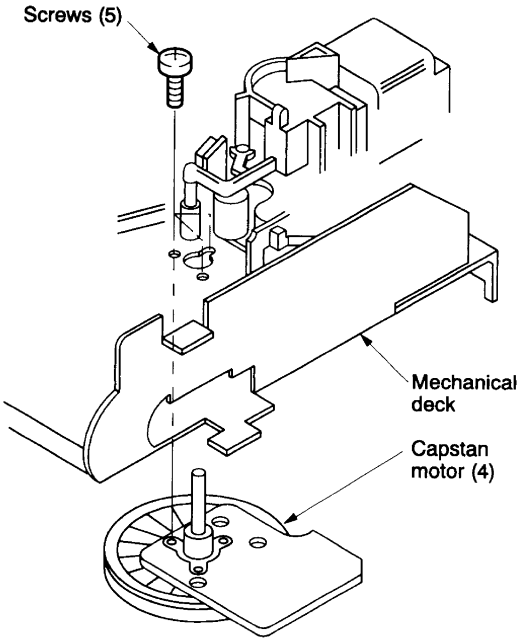

Fig. 2-1-69

4. Take care not to damage and scratch the motor itself, and mount the capstan motor (4) fitting the hole (A) on the mechanical deck and the hole (B) on the capstan motor (4).

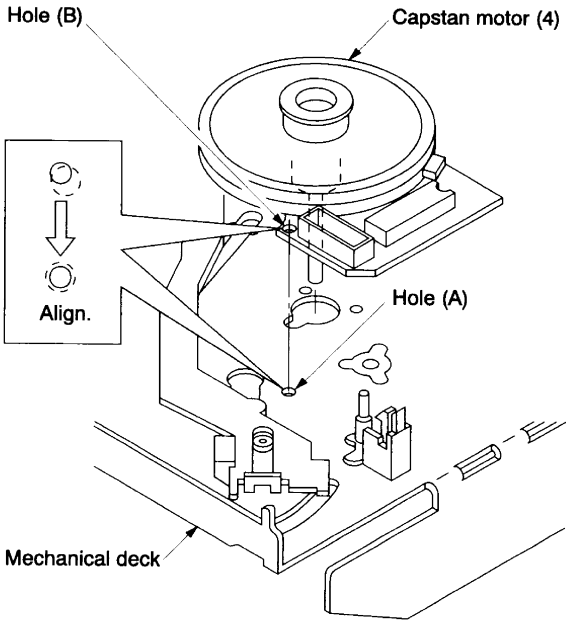

Fig. 2-1-70

5. Mount the capstan motor (4) with three screws (5) viewing from the top side of the mechanical deck.

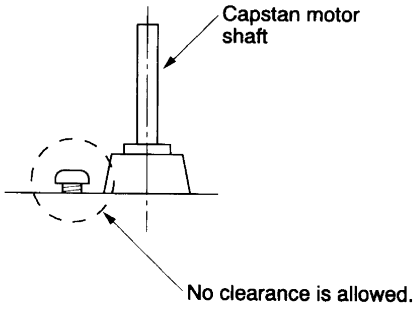

Fig. 2-1-71

Notes:

- Do not use once-removed screws again.
- Take care that no clearance is allowed when securing three screws.

6. After replacement, mount the parts in the reverse order of removal.

Note:

- In this case, take care not to twist the reel belt and stick the grease or etc. on it.

7. After replacing, perform the adjustment according to the tape transport adjustment procedures.

1-6-43. S-VHS Switch Assembly Replacement (S-VHS model only)

1. Slide the cassette holder assembly (1) until the screw (2) can be seen from the hole on the top bracket (3).
2. Insert a screwdriver from the hole provided on the top bracket (3) and secure the screw (2).
3. Remove the S-VHS switch assembly (4) upward.
4. After completion of the replacement, mount the parts in the reverse order of removal.

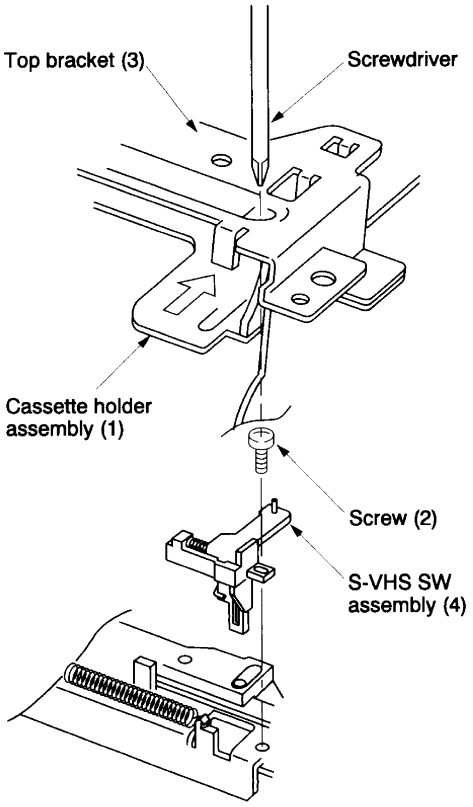

Fig. 2-1-72

1-7. Check and Adjustment

1-7-1. Check of Tension Pole Position

1. Turn the worm wheel counterclockwise after removing the cassette holder assembly on the front loading mechanism, and set the cam gear at playback position.
2. Turn the S reel table assembly (1) clockwise slowly.
3. Adjust the adjuster (3) counterclockwise from the position shown in Fig. 2-1-38 so that the clearance between the left end of the tension lever assembly (2) and the left side of the mechanical deck becomes 7.5 ± 1 mm.

Note:

- There is a long mark at the position of 7.5 mm from the round surface of the mechanical deck. Make sure the position of the mark when adjusting.

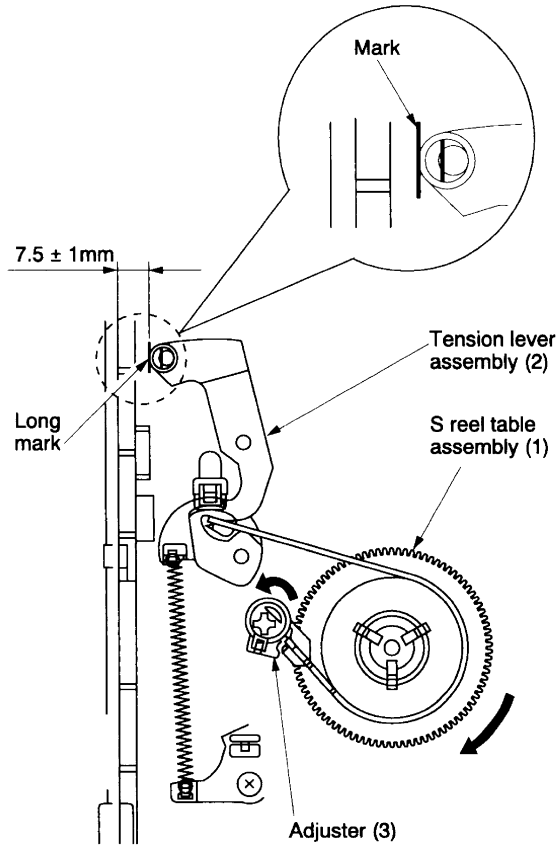

Fig. 2-1-73

1-7-2. Reel Torque Check

(1) Reel torque

1. REVIEW mode (supply side)

   Poor torque may not wind the tape. On the other hand, excessive torque will cause damage to the tape during REVIEW mode.

2. Record/Playback mode (take-up side)

   Too little torque does not rewind the tape to the end. If too large torque, the tape may be stretched by excessive tension.

3. Inspection

   Rewind the torque cassette to the end, then check the torque values shown below:

Review	15.95 ± 3.65 mN•m (162.5 ± 37.5 g•cm)
Record/Playback	6.85 ± 2.45 mN•m (70 ± 25 g•cm)

   For checking method, refer to the following item (2).

(2) Reel torque and back tension check

1. First, record a TV broadcast program on the entire torque cassette tape (KT-300NR) in the SP mode.
2. Load the torque cassette tape (KT-300NR) in the VTR and feed it forward until the end of the tape, before proceeding with measurement.
3. Set the VTR to the REVIEW mode and feed the tape for about 15s, and then make sure the take-up torque described above is obtained while observing the left torque meter.
4. After completion of step 3), feed forward to tape start position and set the VTR to the PLAY mode and feed the tape for about 30s. Read the right torque meter and check the torque described above is obtained.
5. If the review torque and playback torque are out of limit, replace the clutch assembly.
6. When the S reel table assembly, the T reel table assembly and the idle arm assembly are replaced, perform the reel torque check.

<Precautions for Use of Torque Cassette (KT-300NR)>

1. Before loading a torque cassette in a VTR, always remove tape slack. The tape slack can be removed by rotating the reel to its take-up direction. (The tape tends to slack when there is no reel brake actions.)
2. When the torque cassette is loaded, confirm followings:
   - Make sure the tape does not ride up or over the No. 8 cap. If it does, do not eject the tape but return the tape to its correct position, taking care not to damage the tape.
   - Make sure the tape is not slackened. If slackened, operate the VTR in FF or REW mode and then stop the tape. Then make sure the tape is not slackened again.
   - After above confirmation, proceed to the reel torque adjustment and confirmation.
3. Caution for removal of torque cassette
   - When removing the torque cassette from the VTR, set the VTR to the STOP mode and wait for several seconds. Then, make sure the tape is not slackened. Push the EJECT button to remove the cassette.
4. If the previous precautions 1), 2) and 3) are not performed properly, the tape may be damaged and correct measurements can not be performed.
5. Do not use worn out or damaged tape, if used they may damage video heads on the cylinder. In such a case always replace the tape with a new one. The replacement tape is of E-180, 10 m in length.

1-7-3. Tape Transport System

The tape transport system has been precisely adjusted in the factory, so no check and alignment are necessary except the followings:

- Noises observed on the screen
- Tape damage
- Parts, shown in the adjustment procedures for the tape transport system were replaced.

Electrical signal output terminal required for adjustment differs depending upon the models. Refer to the test point location in the Electrical Adjustment Section.

(1) Location of tape transport adjustment

<Adjustment reference>

Lower flange height of No. 8 guide is used as the basic reference for the transport adjustment. To keep height of the No. 8 guide, do not apply excessive force onto the main base to prevent the main base from deformation.

Rectangles shown in Figs. 2-1-74, 2-1-75 show the adjusting locations.

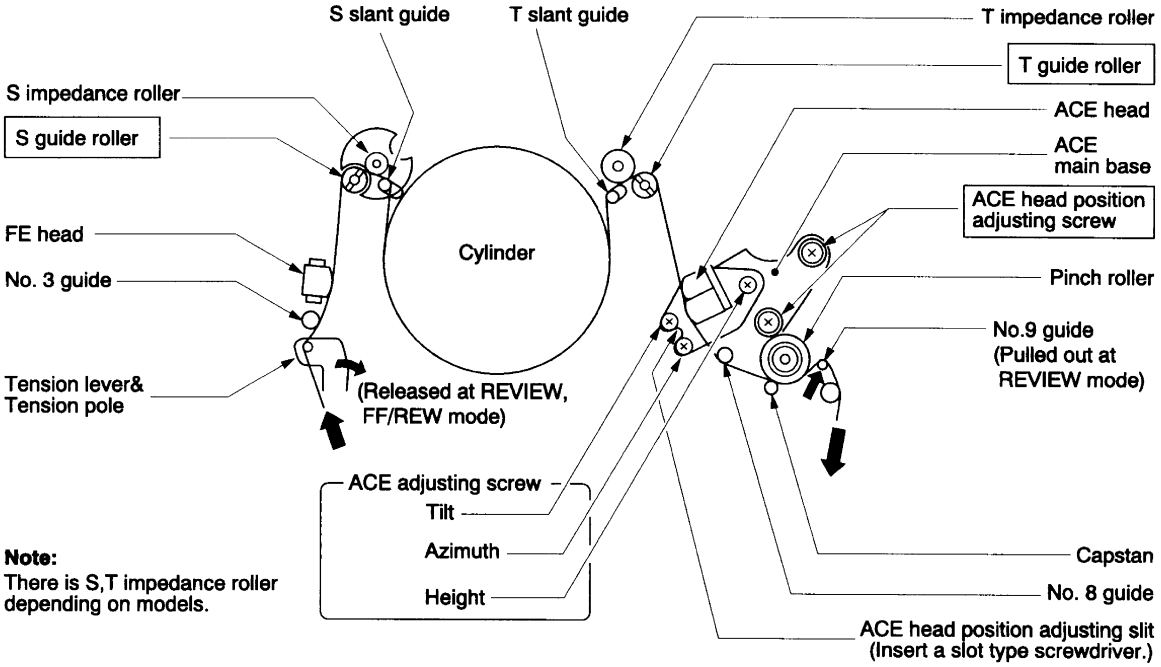

Fig. 2-1-74 Tape travel diagram

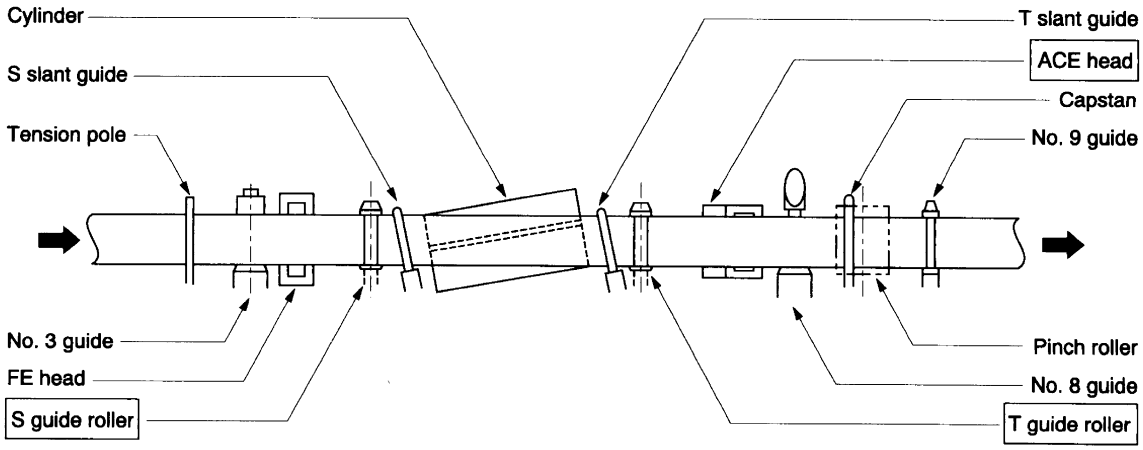

Fig. 2-1-75 Location of tape transport adjustment

(2) Tape transport system adjustment flow chart

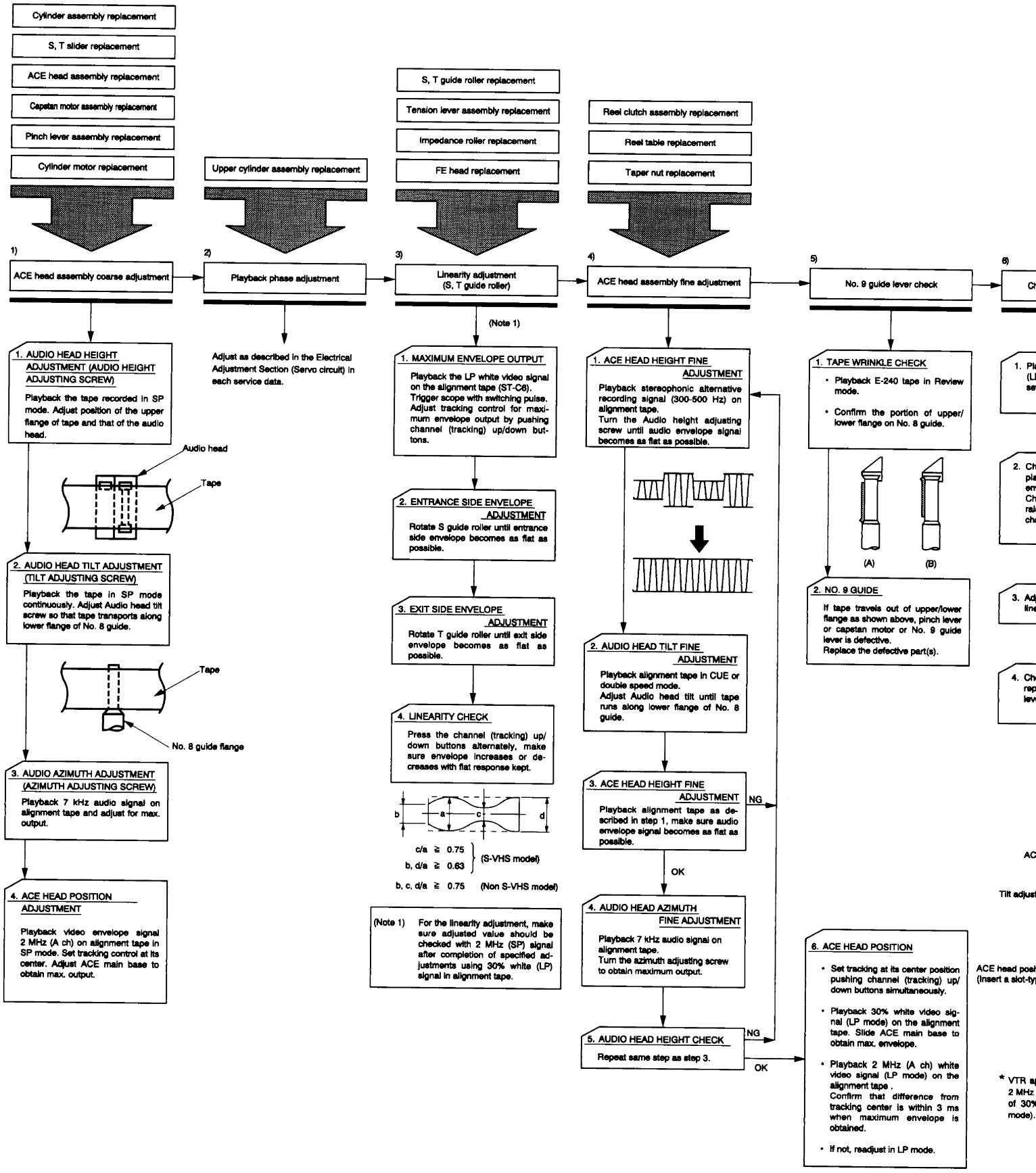

No. 9 guide lever check

PE WRINKLE CHECK

layback E-240 tape in Review ode.

onfirm the portion of upper/ wer flange on No. 8 guide.

(A) (B)

. 9 GUIDE

ape travels out of upper/lower ge as shown above, pinch lever capstan motor or No. 9 guide r is defective.
place the defective part(s).

6) Check for transitional operation

1. Playback 30% white video signal (LP mode) in alignment tape and set review mode.

2. Change mode from review to play and check entrance side envelope rises within 3s. Check entrance side envelope raised within 3s, when mode is changed from slot-in to play.

OK

NG

3. Adjust S guide roller to readjust linearity.

4. Check step 2 and 3 if no good, replace S slider ass'y or tension lever.

7) Recorded & reproduced envelope check

• Records signals in SP & LP modes, using E-180, E-240 tape and playback them to check envelopes.

b a c d

c/a ≧ 0.75
b, d/a ≧ 0.63 } (Non S-VHS model)

b, c, d/a ≧ 0.75 (S-VHS model)

8) Tape damage check

• Run E-240 tape in each mode and check there is no damage at each guide.

Playback mode

Guide roller section damage

Back to step 3) linearity adjustment. (or Slider assembly replacement)

Damage at No. 8 guide brush

Back to step 1) ACE head assembly coarse adjustment. (or Pinch lever replacement)

Damage at No. 1 guide lower flange

Back to step 6) check for transitional operation. (or Tension lever replacement)

Review

Damage at No. 8 guide flange

Back to step 5) No. 9 guide lever check or 1) ACE head assembly coarse adjustment. (Pinch lever, No. 9 lever, Capstan motor replacement)

Damage at guide roller section

Back to step 3) linearity adjustment. (or Slider assembly replacement)

Frame advance mode

Damage at No. 8 guide flange

Back to step 3) linearity adjustment.

9) Checks for HI-Fi models only.

AFM envelope output max. point check

Playback 3 MHz video signal. 400 Hz AFM signal in alignment tape ST-C7 in SP mode.

Check video envelope max. point (A ch).

Check control pulse phase difference is within ±3 ms from that point to AFM envelope max. point.

ACE head

Tilt adjusting screw

ACE height adjusting screw

ACE head position adjusting slit (insert a slot-type screwdriver.)

ACE head position screw

Azimuth adjusting screw

E HEAD POSITION

et tracking at its center position ushing channel (tracking) up/ own buttons simultaneously.

layback 30% white video sig- al (LP mode) on the alignment ape. Slide ACE main base to btain max. envelope.

layback 2 MHz (A ch) white ideo signal (LP mode) on the lignment tape .
onfirm that difference from racking center is within 3 ms hen maximum envelope is btained.

not, readjust in LP mode.

* VTR applied SP mode only. Use 2 MHz (A ch) video signal instead of 30% white video signal (LP mode).

Fig. 2-1-76

(3) Tape transport system adjustment

<Pre-adjustment>

When the part(s) listed in Table 2-1-5 is replaced, perform required adjustments by referring to procedures for the tape transport system. When the part(s) listed in Table 2-1-5 is replaced, the tape path may be changed and may damage alignment tape. To prevent this, first run a E-240 tape and make sure excessive tape wrinkle does not occur at each tape guide.

1. If tape wrinkle is observed at the S, T guide rollers, turn the S, T guide rollers until wrinkle disappears.
2. If tape wrinkle is observed at the No. 8 guide, perform the tilt adjustment of the ACE head.

Table 2-1-5

Parts replacement	Adjustment procedure
• Cylinder assembly • S, T sliders • ACE head • Pinch lever assembly • Capstan motor • No. 9 guide lever assembly	From item 1)
• Upper cylinder	From item 2)
• S, T guide rollers • Tension lever assembly • FE head	From item 3)
• Reel clutch assembly • S, T reel tables	From item 4)

<Adjustment procedures>

1) ACE head assembly coarse adjustment

a. Audio head height adjustment

1. Playback the tape recorded in the SP mode. Observe the surface of the ACE head.
2. Turn the ACE height adjusting screw so that upper tape edge matches to the upper edge of the audio head core.

b. ACE head tilt adjustment

1. Playback the tape recorded in the SP mode and observe running condition of the tape at the lower flange of No.8 guide.
2. Turn the ACE tilt adjusting screw until tape wrinkle is caused at the lower flange of No. 8 guide as shown in Fig. 2-1-78 (A).
3. Turn the ACE tilt adjusting screw counterclockwise until the tape travels along the lower flange as shown in Fig. 2-1-78 (B).

c. Audio head azimuth adjustment

1. Playback the 7 kHz audio signal on the alignment tape in the SP mode.
2. Connect a millivoltmeter or oscilloscope to the audio line output terminal.
3. Turn the ACE azimuth adjusting screw to obtain maximum audio output.

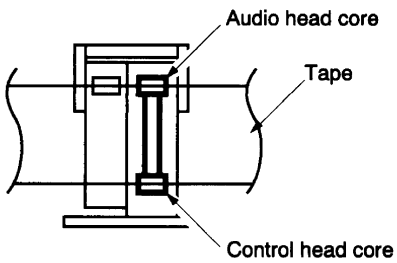

Fig. 2-1-77

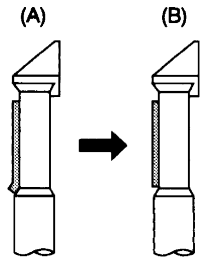

Fig. 2-1-78 No. 8 guide rough adjustment

d. ACE head position adjustment

1. Playback the 2 MHz video envelope signal in the alignment tape in the SP mode. Loosen the ACE head position securing screw.
2. Insert a slot-type screwdriver into the ACE head position adjusting slit on the ACE main base and adjust the ACE main base so that the video envelope reaches a peak level at the tracking center position when the channel (tracking) up/down buttons of VTR are pressed simultaneously.

2) Playback phase adjustment

1. Perform the adjustment according to the methods stated in the electrical adjustment (servo circuit).

3) Linearity adjustment

1. Playback the LP mode white video signal on the alignment tape.

Note:

- For models SP mode only, use the 2 MHz (A ch) video siganl in the SP mode.

2. Trigger the scope with the switching pulse to issue the envelope signal output.
3. Make sure the video envelope waveform (in its maximum output) meets the specification shown in Fig. 2-1-79. Again make sure the same by playing back the SP mode 2 MHz video signal on the alignment tape. If not satisfied, adjust as follows:

Note:

a = maximum output of the video RF envelope

b = minimum output of the video RF envelope at the entrance side

c = minimum output of the video RF envelope at the center point of cylinder

d = minimum output of the video RF envelop at the exit side of cylinder

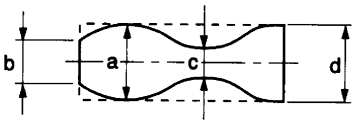

c, b, d/a≧0.75 (S-VHS model)

b, d/a≧0.63
c/a≧0.75 } (Non S-VHS model)

Fig. 2-1-79

4. If the (A) section in Fig. 2-1-80 does not meet the specifications, adjust the S guide roller in up or down direction.
5. If the (B) section in Fig. 2-1-80 does not meet the specifications, adjust T guide roller in up or down direction.

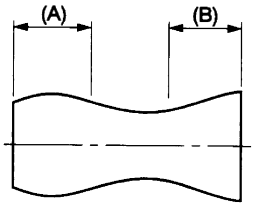

Fig. 2-1-80

6. After completion of the adjustment(s), push the channel (tracking) up/down button and make sure video envelope variations are almost flat.
   Next, playback the 2 MHz SP mode video signal on the alignment tape and makes the video RF envelope variations are also flat when channel (tracking) UP/DOWN buttons is pushed.
7. If the envelope varies like NG figures as shown in Fig. 2-1-81, perform the adjustment again.

   Smooth secondary curves are allowable level.

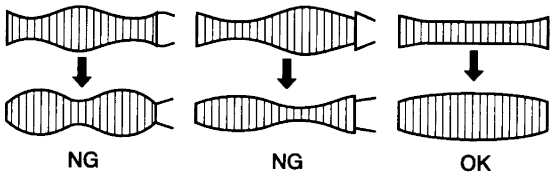

Fig. 2-1-81 Abnormal waveform variation

4) ACE head assembly fine adjustment

a. ACE head height fine adjustment

1. Playback the stereophonic alternative recording 300 – 500 Hz audio signal on the alignment tape.
2. Adjust the ACE height adjusting screw so that the signal envelope is obtained almost flat.

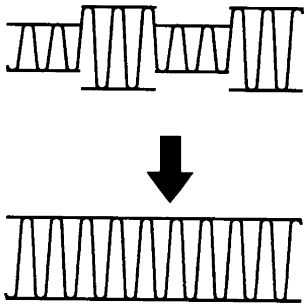

Fig. 2-1-82

Note:

- If there is no alignment tape (ST-C6, ST-C7), do not perform this item "a. ACE head height fine adjustment", and perform the process of the note in item "e. Audio head height check" described later.

b. ACE tilt adjustment

1. Observe the lower flange of No. 8 guide. If any wrinkle is observed, turn the ACE tilt adjusting screw counterclockwise until the wrinkle disappears.
2. If a gap is observed between the lower flange of No. 8 guide and the lower edge of tape, turn the ACE tilt adjusting screw clockwise until the tape travels along the lower flange.

Note:

- This adjustment is performed easily in SP mode playback, double speed playback mode or CUE mode.

c. Audio head height check

1. Playback the stereophonic alternative recorded 300 – 500 Hz audio signal as described in the step 4)-a, and check if the audio envelope is flat. If not, repeat the adjustment described in step 4)-a again.

d. Audio azimuth adjustment

1. Playback the 400 Hz, 7 kHz audio signal on the alignment tape.
2. Turn the ACE azimuth adjusting screw until the maximum audio output is obtained.

e. Audio head hight check

1. Playback the alignment tape desribed in step 4)-a and check if the audio envelope is flat. If not, repeat the adjustment described in step 4)-a.

Note:

- If there is no alignment tape (ST-C6, ST-C7), perform the audio height alignment using the current alignment tape at this adjustment step.

1. Playback the 400 Hz audio signal (SP mode) on the alignment tape.
2. Turn each three alignment screw of the ACE head to the same direction in 45 degrees steps evenly so that the audio output level becomes maximum.
3. Perform the confirmation and adjustment for the tilt and the azimuth again.

f. ACE head postion adjustment

1. Playback the white envelope (LP mode) on the alignment tape.
2. Push the channel (tracking) up/down buttons simultaneously and reset the tracking at its center position.
3. Trigger the oscilloscope with the video switching pulse and observe the video envelope waveform.
4. Slide the ACE main base until the maximum envelope output is obtained as described in ACE head position coarse adjustment.
5. Playback the 2 MHz video signal (SP mode) on the alignment tape.
6. Make sure the envelope output is maximum when the tracking control is placed at its center position.

   If no envelope output is obtained with the tracking control set to the center position, again adjust it for maximum envelope output in SP and LP modes. When envelope output is maximum in the LP mode at the tracking center, difference with the case in the SP mode is within 3 ms.
7. Tighten the ACE head position fixing screw and secure the ACE main base.

g. After completion of ACE head fine adjustment, apply screw lock to two screws (tilt, azimuth adjusting screws) in front of the ACE head.

5) No. 9 guide lever adjustment

1. Set the VTR to Cue mode with E-240 tape (at beginning portion) loaded. Switch the Cue mode to the review mode when the tape has been rewound into the T-reel table to some extent.
2. Check tape wrinkle at the upper and lower flange of No. 8 guide. Check the tape does not come off from the flange while running. If the tape comes off from the flange, replace the pinch lever, capstan motor or No. 9 guide lever since the part(s) is (are) defective.

Note:

- Modify the lid of the cassette for the alignment tape E-240 previsously so that the alignment is performed easily.

6) Check for transitional operation from Review to Play, slot-in to play

1. Playback the LP mode white video signal on the alignment tape in Review mode and observe the video envelope with the oscilloscope.
2. Switch the Review mode to the Play mode. When switched to the Play mode, make sure the entrance side envelope comes to an approximate steady state within 3s as shown in Fig. 2-1-83.

If it does not rise within 3s, take the following steps starting 4).

3. Switch the cassette slot-in mode to the Play mode. As in item 2), if it does not rise within 3s, adjust as follows.

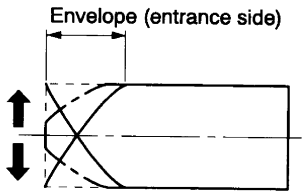

Fig. 2-1-83 Video envelope rising when operation mode is switched from review to play mode

4. Adjust the S guide roller and perform the linearity adjustment again.
5. Check above items 2) and 3) to see that the video envelope rises within 3s. If not, S slider assembly or the tension lever is damaged. Replace either (or both) of them.

Note:

- If the rising characteristic is poor in Review mode, screen noise may occur in synchronous editing recording. Perform the adjustment carefully.

7) Envelope check

1. Make recordings and playback the tapes (E-180 and E-240) in SP and LP modes and make sure the playback output envelope meets the specifications shown in Fig. 2-1-79.
2. In playback the tape (with a E-180), the video envelope should meet the specification as shown in Fig. 2-1-84.

Note:

- Check for both modes, SP and LP. Also check for AFM envelope when using a Hi-Fi model.

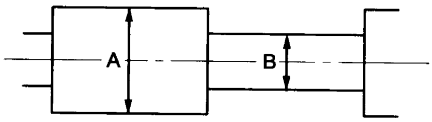

- B/A ≧ 0.55
- B ≧ 120 mV

Fig. 2-1-84 Envelope output and output difference

3. If the performance does not meet both specifications above 1 and 2 above, replace the upper cylinder assembly.
4. Set the VTR to Rec mode (LP) with the E-180 tape loaded (at the beginning part) and check operation of the synchronous editing recording.
5. If picture noises are observed at the starting position of the editing, perform "6) Check for transitional operation from Review to Play, slot-in to play".

8) Tape wrinkle check

1. Playback the E-240 tape in the normal Play mode, CUE mode, Review mode and the frame advance mode, and check each guide for wrinkle.
2. If excessive tape wrinkle is observed at the mode shown below, perform the associated adjustments also shown below. (The parts described in ( ) may need to replace.)

a. Playback mode

Tape wrinkle at the S, T-guide rollers section

Item 3) Linearity adjustment
(Slider assembly)

Tape wrinkle at No. 8 guide flange

Item 1) ACE head assembly coarse adjustment
(Pinch roller)

Tape wrinkle at lower flange of No. 1 guide

Item 6) Check for transitional operations from Review to Play, and Slot-In to Play
(Tension lever)

b. Review mode

Tape wrinkle at No. 8 guide

Item 1) ACE head assembly coarse adjustment
(Pinch lever, No. 9 guide lever, capstan motor)

Tape wrinkle at the guide rollers

Guide roller adjustment (Slider assembly)

c. Frame advance mode

Tape wrinkle at No. 8 guide

Item 3) Linearity adjustment
(Pinch lever, capstan motor)

9) Maximum AFM envelope output point check (Hi-Fi model)

1. Playback the SP mode 3 MHz video signal and the 400 Hz AFM signal on the alignment tape.
2. Trigger the oscilloscope with the video switching pulse, adjust the tracking control and check the control pulse phase at the maximum video envelope (A ch) output point.
3. Make sure the control pulse phase difference among each maximum point of AFM envelope, Ach and Bch is within ± 3 ms with the above point used as the basic reference.

Note:

- If the phase difference exceeds 3 ms, replace the upper cylinder.

2. ELECTRICAL ADJUSTMENT

<Test equipment required>

Adjustment will be performed with the following test equipment.

1. Color TV (Monitor)
2. Oscilloscope, 2 CHs, 15 MHz or higher with delay system
3. Frequency counter (7 digits or higher)
4. Millivoltmeter
5. Digital voltmenter
6. Tester (20 kΩ/V)
7. Audio generator
8. Audio attenuator
9. Alignment tapes
   Part code: ST-C6: 70909409, ST-C7: 70909410
10. Alignment screw driver (jig)
11. Color pattern generator
12. Video sweep generator

<Color bar signal>

Color bar signals of 75% recorded on the alignment tapes are shown in Fig. 2-2-1.

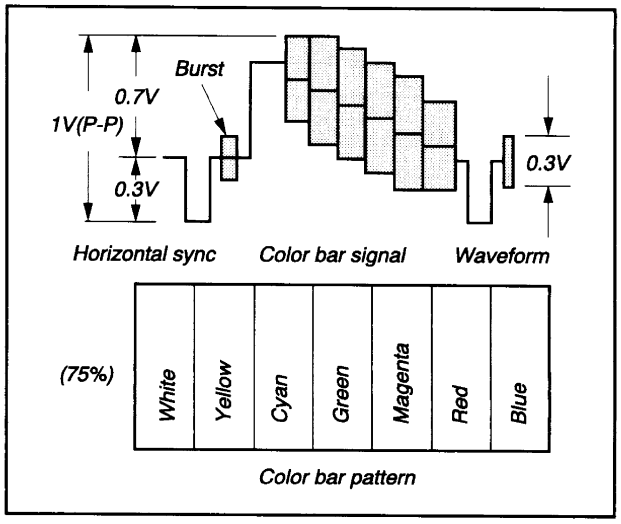

Fig. 2-2-1

<Specified input and output levels, and impedance>

Video input:	Negative sync, standard composite video siganl 1 V(p-p), 75Ω
Video output:	Same as the video input 1 V(p-p), 75Ω
Audio input:	308 mV(rms), more than 47 kΩ (phono type), more than 10 kΩ (21 pin type)
Audio output:	308 mV(rms), less than 4.7 kΩ (phono type), less than 1.0 kΩ (21 pin type)

<Alignment sequence>

Recorded the alignments in the sequence as shown in Fig. 2-2-2.

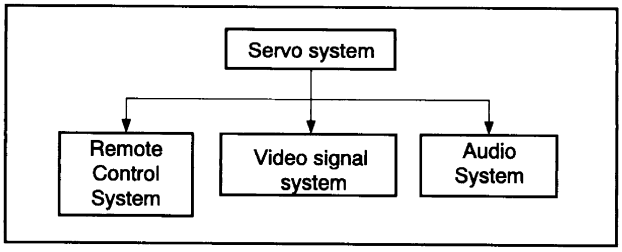

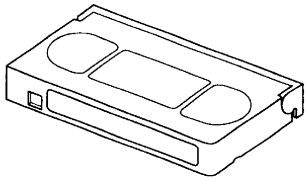

Fig. 2-2-2

Alignment tape specifications

[1] ST-C6

Table 2-2-1

Segment	System	Playback Time (min)	Video Signal	Audio Signal	Applications
1	PAL & SECAM	10	Mono Scope	1 kHz	Playback phase check, audio level check
2	PAL & SECAM	5	3 MHz A ch	400 Hz and 7 kHz	ACE head position adjustment, ACE head azimuth adjustment, Linearity adjustment
3	PAL & SECAM	5	3 MHz A ch	1 kHz (stereo)	ACE head position adjustment, ACE head height adjustment, Linearity adjustment
4	PAL	5	Color bar	3 kHz	Video and Sound checks
5	SECAM	5	Color bar	3 kHz	Video and Sound checks
6	MESECAM	5	Color bar	3 kHz	Video and Sound checks
7	NTSC	5	Color bar	1 kHz	Video and Sound checks

[2] ST-C7

Table 2-2-2

Segment	System	Playback		Video Signal	Audio Signal	Applications
		Time (min)	Mode			
1	PAL	5	LP	3 MHz A ch	500 Hz (stereo)	ACE head position adjustment, ACE head height adjustment, Linearity adjustment
2	PAL	3	LP	Color bar	3.2 kHz	LP mode operation check, ACE head azimuth check and adjustment
3	PAL	3	SP	Color bar	AFM 400 Hz	SP mode operation check, AFM check
4	PAL & SECAM	5	SP	3 MHz A ch	AFM 400 Hz	AFM tracking checks
5	SECAM	5	LP	3 MHz A ch	No signal	Linearity adjustment
6	SECAM	3	LP	Color bar	No signal	LP mode operation check
7	SECAM	3	SP	Color bar	AFM 400 Hz	SP mode operation check, AFM check

2-1. Servo Circuit

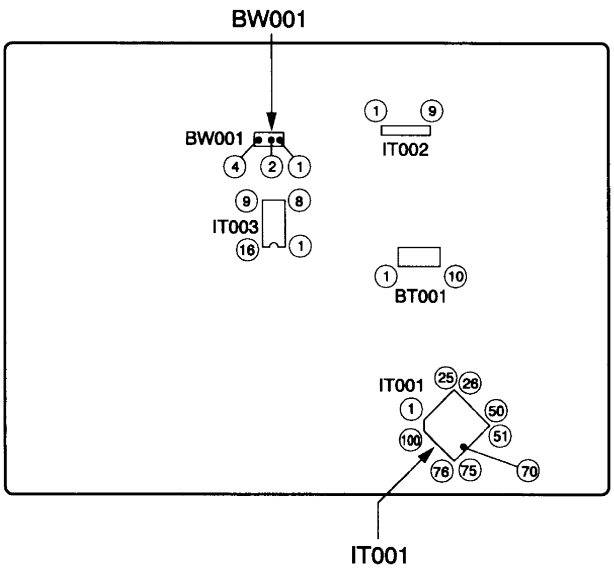

Fig. 2-2-3 Main PC board

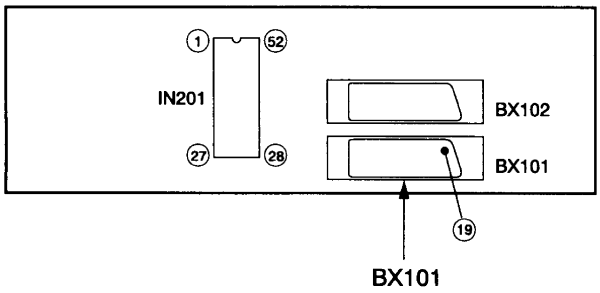

Fig. 2-2-4 Terminal/Audio PC board

2-1-1. Playback Phase (PG) Adjustment

Test point: Pins 1 and 2 of BW001, Pin 19 of BX101 (Video out)

Test equipment: Oscilloscope

1. During playback press the VTR's channel up and down buttons simultaneously to reset to tracking center.
2. Confirm that phase difference between the fall of the DFF pulse (pin 1 of BW001) and the rise of CTL pulse (pin 2 of BW001) is 12 ± 0.5 ms.
3. Further, observe the envelope (pin 4 of BW001) waveform, and confirm that the ACE head position adjustment and linearity adjustment have been made, and C-SYNC (pin 70 of IT001) is being input during playback.
4. Set the VTR to the STOP mode.

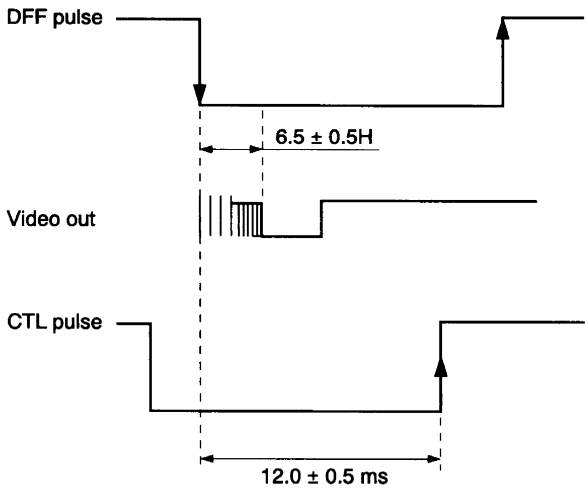

Fig. 2-2-5

5. Press the unit's channel up/down buttons simultaneously for more than 5s.
6. Afterwards, within 2s, press the PLAY button on the remote controller.
7. The automatic adjustment will be made for about 10s, all the displays will blink. If the automatic adjustment is not carried out, confirm that the alignment tape has a safety tab or not, and redo from the step 3.
   1) When adjustment has been completed:
      The display will blink for 10s, stop blinking and return to the normal display in the STILL mode for 1.2s, then it shifts to the playback display in the playback mode.
      The display is as shown below.

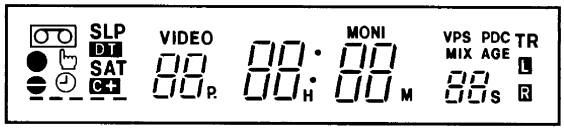

Fig. 2-2-6

   2) When adjustment fails:
      It goes into the STOP mode.
8. Confirm that the play indicator is displayed, and confirm that the rising and falling edge of the SW pulse is 6.5 ± 0.5H from the V-sync front edge of the video signal.

2-1-2. When IT004 is Replaced

When IT004 is replaced, the data in the VTR is required to memorize in the new one. So perform the following procedures.

1. Press the channel up/down buttons on the VTR simultaneously for more than 5s while the display blinks and the unit is in the power off mode.
2. And then within 2s, press the CANCEL button on the remote controller.
3. After displaying the address at the channel display area and the data at the minute display area, set the address to 12 using the channel up/down buttons on the remote controller.
   Next, set the data to d2 using the FF/REW buttons on the remote controller. The data goes up using FF button and down using REW button.

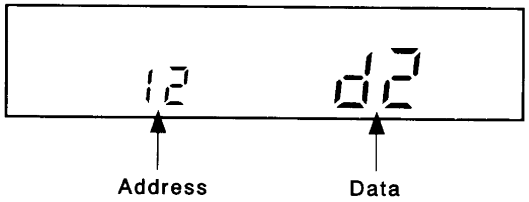

Fig. 2-2-7

4. Set each address and data in the table below following the description above.

Table 2-2-3

Address	Data
24	0A
25	03
26	15
27	0A

5. Perform the adjustment described in the item "2-1-1. Playback Phase (PG) Adjustment".
6. Pull out the power cord plug from the AC outlet once and insert the power cord plug into the AC outlet again.
7. Perform the channel presetting as the IT004 replaced has no channel data.

2-2. Self Diagnosis Function

2-2-1. Outline

When a tape running stops or the VTR enters the power OFF mode, etc. due to some abnormality, the abnormality is stored in the EEPROM and displayed on the display tube.

2-2-2. Storing abnormal modes

- The abnormality is classed into 5 groups, and the abnormality number, system control mode, and the mechanism position at which the abnormality occurred are stored in the EEPROM.
- The writing timing is just after the abnormality occurred.

2-2-3. Abnormality mode display

- Press the CH UP and CH DOWN buttons on the VTR simultaneously for more than 5s.
- And then within 2s, press the STILL button on the remote control.
- The system control mode at which the abnormality occurred is displayed at the channel display area, "E" is displayed at the hour digit, abnormality generation number is displayed at the minute digit, and the mechanism position is displayed in the second digit position.
- The abnormality mode is displayed regardless of the power on off.

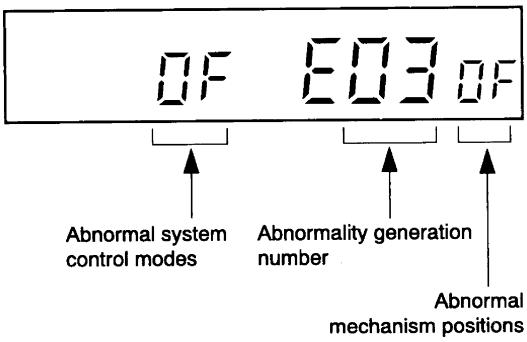

Fig. 2-2-8

- When the Counter Reset button is pressed in the display period, the abnormality display data is initialized and "-" is displayed.

The data displayed are as follows:

Table 2-2-4 Abnormality generation number

01	Cylinder stop
02	Reel abnormality (take up)
03	Reel abnormality (supply)
04	Abnormal slot in/ slot out
05	Abnormal loading

Table 2-2-5 Abnormal system control modes

00	Standby
01	Stop
02	Rewind
03	Review
04	FF
05	Cue
06	Playback
07	Still, slow playback
08	X2 speed
09	Unloading stop
0A	Reverse playback
0b	Still in reverse playback, Reverse slow playback
0C	Recording
0d	Record pause
0E	Power off eject
0F	Eject
10	Short FF
11	Short REW

Table 2-2-6 Abnormal mechanism positions

01	F/L out
03	F/L down
05	Loading/unloading
07	Reverse rotation with pinch roller ON
09	Playback with pinch roller ON
0b	Stop with main brake ON
0d	FF/REW
0F	Position detection impossible

Positions 0, 2, 4 exist as mechanism positions. For example, 8 shows a position between 7 and 9 (between playback position and review position).

This page is not printed.

SECTION 4
PARTS LIST

SAFETY PRECAUTION

The parts identified by ⚠ mark are critical for safety. Replace only with part number specified.

The mounting position of replacement is to be identical with originals.

The substitute replacement parts which do not have the same safety characteristics as specified in the parts list may create shock, fire or other hazards.

NOTICE

The part number must be used when ordering parts in order to assist in processing, be sure to include the model number and description.

Parts marked # are of chip type and mounted on original PC boards.

However, when they are placed for servicing works, use discrete parts listed on the parts list.

ABBREVIATIONS

1. Integrated Circuit (IC)

2. Capacitor (Cap)

- **Capacitance Tolerance (for Nominal Capacitance more than 10pF)**

Table 4-2-1

Symbol	B	C	D	F	G	J	K	M	N
Tolerance %	± 0.1	± 0.25	± 0.5	± 1	± 2	± 5	± 10	± 20	± 30

Symbol	P	Q	T	U	V	W	X	Y	Z
Tolerance %	+ 100 0	+ 30 − 10	+ 50 − 10	+ 75 − 10	+ 20 − 10	+ 100 − 10	+ 40 − 20	+ 150 − 10	+ 80 − 20

Ex. 10μF J = 10μF ± 5%

- **Capacitance Tolerance (for Nominal Capacitance 10pF or less)**

Table 4-2-2

Symbol	B	C	D	F	G
Tolerance pF	± 0.1	± 0.25	± 0.5	± 1	± 2

Ex. 10pF G = 10pF ± 2pF

3. Resistor (Res)

- **Resistance tolerance**

Table 4-3-1

Symbol	B	C	D	F	G	J	K	M
Tolerance %	± 0.1	± 0.25	± 0.5	± 1	± 2	± 5	± 10	± 20

Ex. 470W J = 470W ± 5%

4. EXPLODED VIEWS

4-1. Packing Assembly

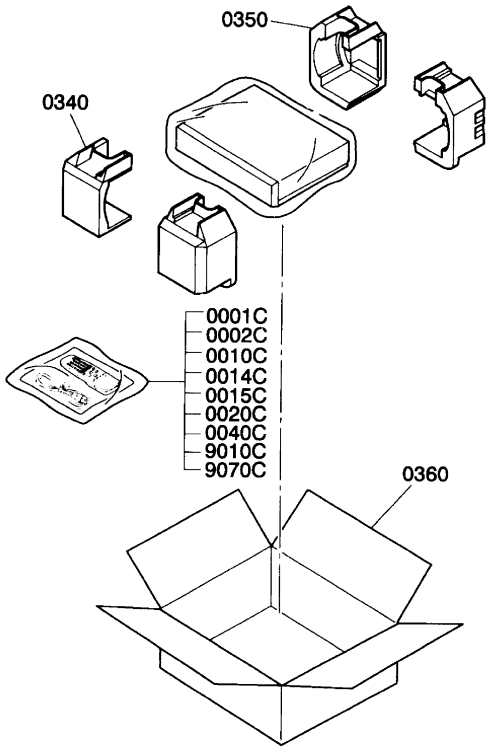

Fig. 4-4-1

4-2. Remote Control Unit

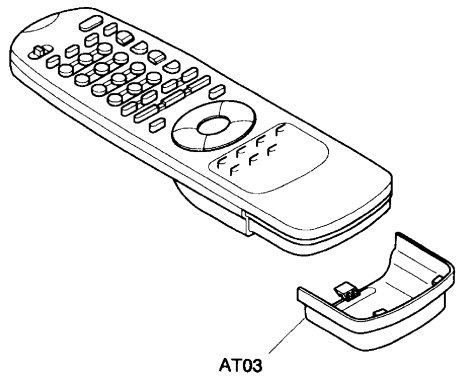

Fig. 4-4-2

4-3. Cabinet Assembly

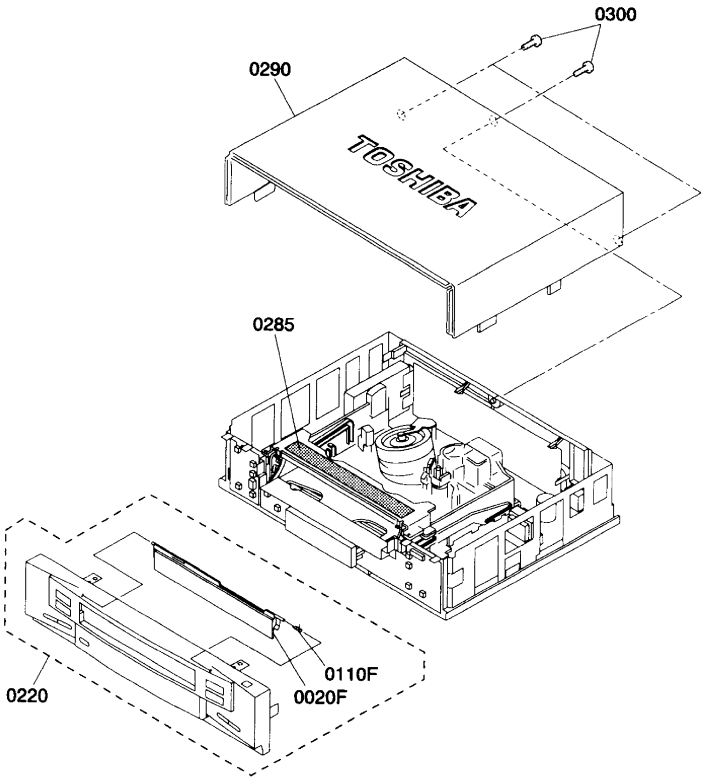

Fig. 4-4-3

4-4. Chassis Assembly

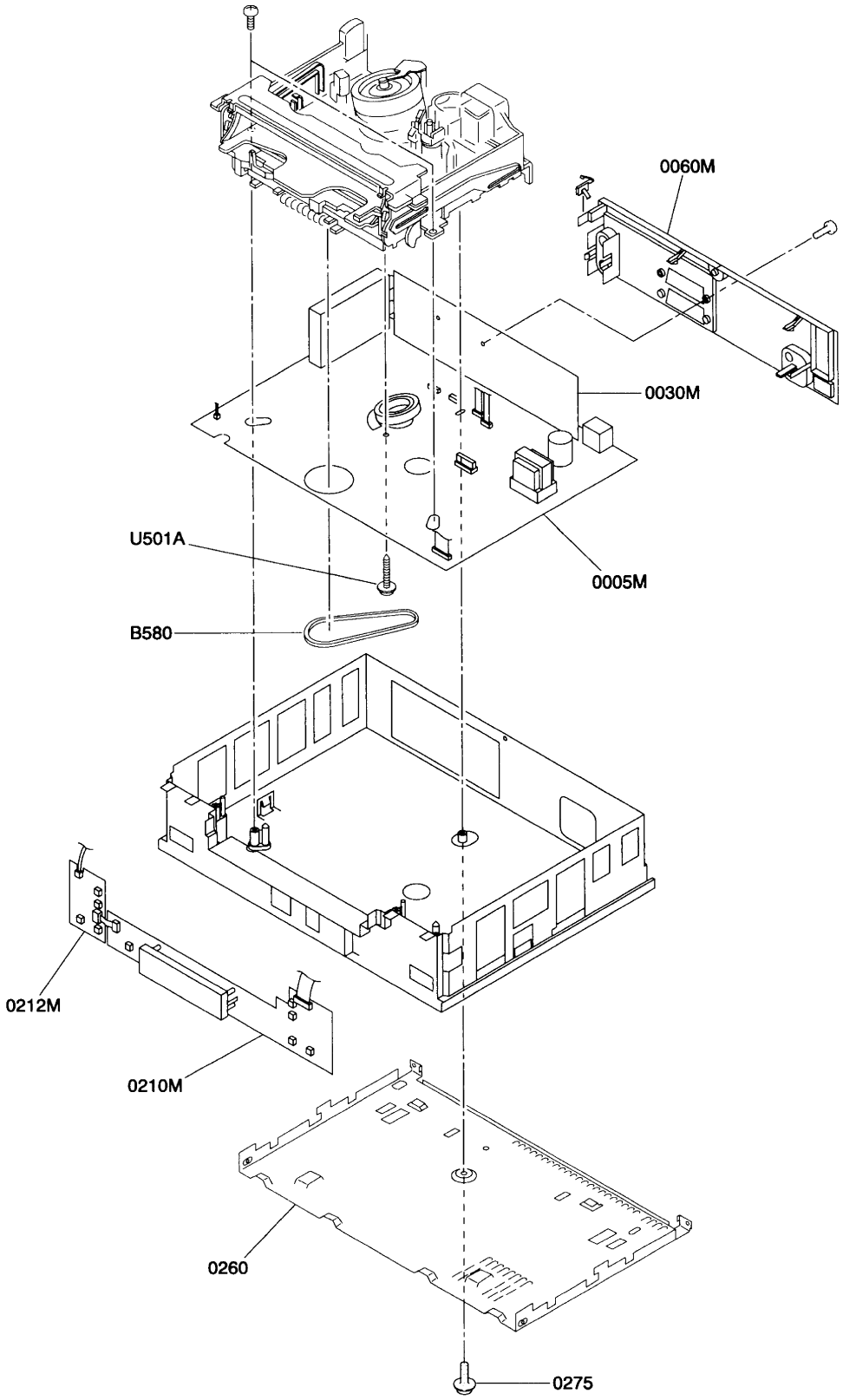

Fig. 4-4-4

4-5. Mechanism Assembly (1)

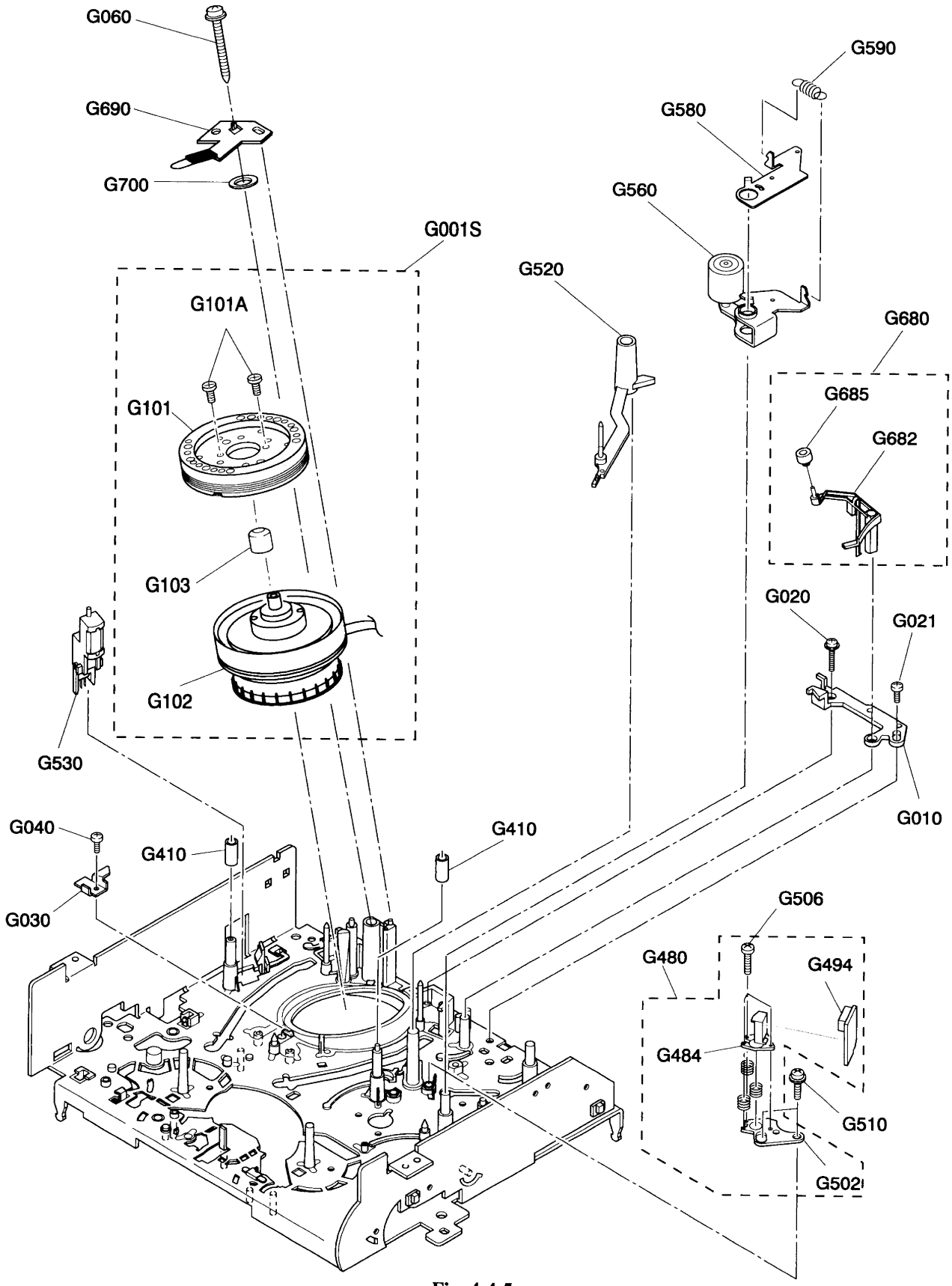

Fig. 4-4-5

4-6. Mechanism Assembly (2)

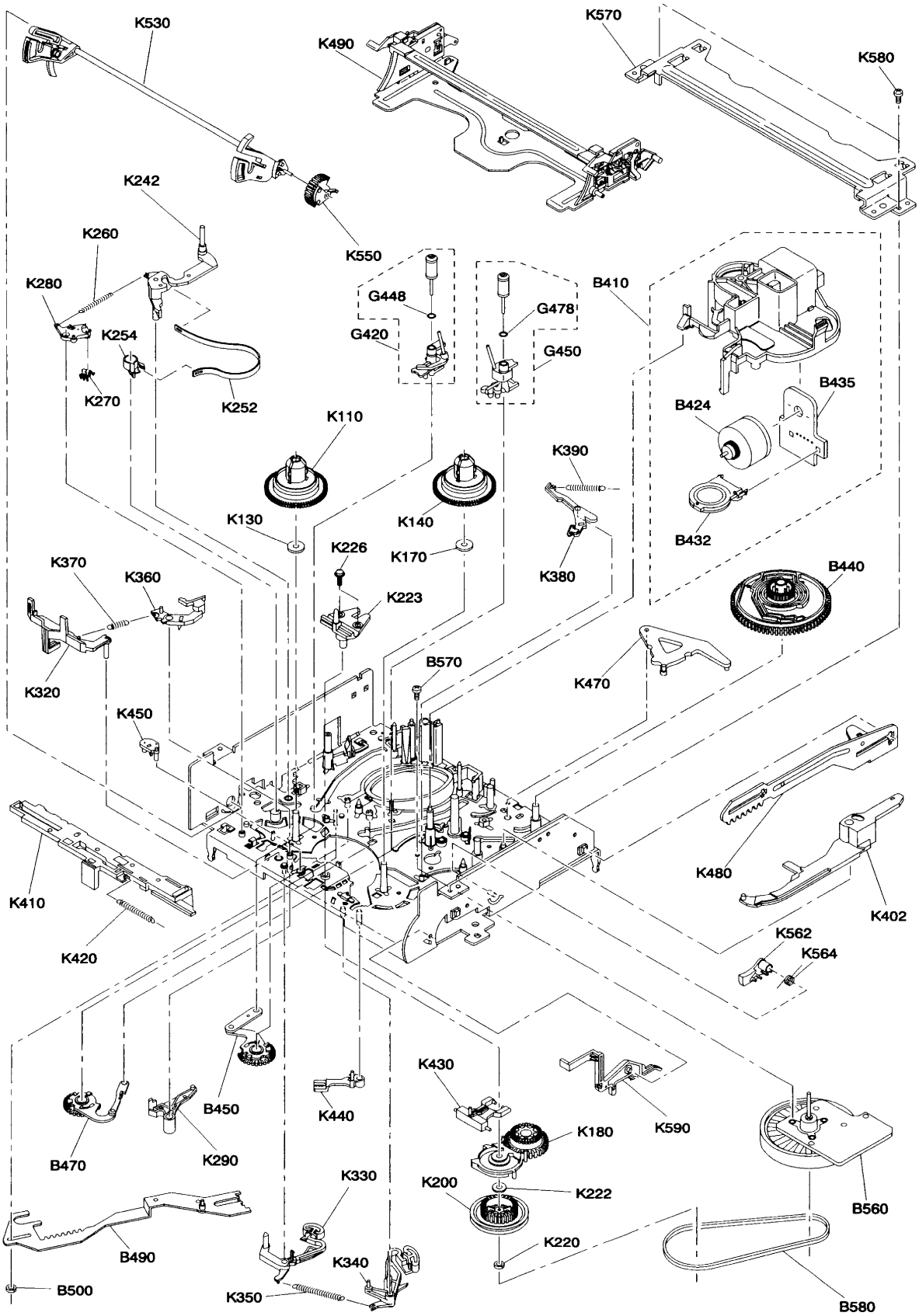

Fig. 4-4-6

5. PARTS LIST

LOCATION NUMBER	PART NUMBER	DESCRIPTION	
		- MECHANICAL PARTS -	
0001C	70062070	Owner's Manual	English
0010C	70148920	Remote Control Unit	
0014C	70012246	Mains Cord	
0020F	70052210	Cassette Door	
0110F	70051372	Spring	
0220	70052224	Front Panel	
0260	70051141	Bottom Plate	
0275	70031485	Screw	
0285	70051391	Rubber Form	
0290	70052223	Top Cover	
0300	70030702	Screw	
0340	70062227	Packing	Front
0350	70062228	Packing	Rear
0360	70062225	Case	
9010C	70062169	Satellite Leaflet	
9070C	70062062	Quick Reference Manual	
AT03	70108916	Case	Battery
B218	70379660	Center Holding Post	
B410	70322511	Loading Drive Assy	
B424	70322513	Loading Motor Sub Assy	
B432	70145370	Cam Switch	
B435	70322521	Loading Drive Unit	
B440	70333454	Cam Gear	
B450	70322514	S Loading Assy	
B470	70322516	T Loading Assy	
B490	70322518	Loading Slider Assy	
B500	70396193	Washer	FI 2.6x6x 0.5mm
B560	70125704	Capstan Motor Assy	
B570	70391024	Screw	2.6x6mm
B580	70031881	Belt	Reel
G001S	70031739	Cylinder Assy	
G010	70031444	Plate(Cylinder)	
G020	70031643	Screw	2.6x5mm
G021	70031644	Screw	2.6x5mm
G030	70031445	Plate(Cylinder)	
G040	70031644	Screw	2.6x5mm
G060	70031449	Screw	
G101	70031695	Upper Cylinder Assy	
G101A	70031521	Screw	
G102	70031741	Lower Cylinder Assy	
G103	70031683	Ground Cap Assy	
G104	70325786	Ground Cap	
G181	70391422	Screw	2x4mm
G410	70338212	Guide Sleeve	
G420	70322508	S Slider Assy	
G428	70322435	Roller Assy	
G448	70353153	O ring	
G450	70322506	T Slider Assy	
G458	70322438	Roller Assy	
G478	70353153	O ring	
G480	70318593	ACE Head Assy	
G484	70182100	ACE Head Sub Assy	
G498	23901248	Socket, 7P	
G506	23712208	Screw	2x8mm
G510	70391824	Screw	2.6x10mm
G520	70326704	No.9 Guide Lever Assy	
G530	70183019	FE Head	
G560	70326762	Pinch Lever Assy	
G580	70326708	Pinch Drive Assy	
G590	70356326	Spring	
G680	70031493	Cleaner Lever Assy	
G690	70031540	Ground Brush	
K110	70327126	S Reel Assy	
K130	70396329	Washer	
K140	70327128	T Reel Assy	
K170	70396329	Washer	
K180	70327137	Idle Arm Assy	
K200	70333450	Center Gear Pulley	
K220	70396337	Washer	
K222	70396336	Washer	
K223	70326716	Center Post Assy	
K226	23723002	Screw	2.6x6mm

LOCATION NUMBER	PART NUMBER	DESCRIPTION	
K242	70326698	Tension Lever Sub Assy	
K252	70353149	Band Brake Assy	
K254	70361598	Band Holder	
K260	70356324	Spring	
K270	70363315	Hook Lever	
K280	70363316	Hook Lever	
K290	70363317	Tension Drive Lever	
K320	70363250	Rec Inhibit Lever	
K330	70326710	S Main Brake Assy	
K340	70326711	T Main Brake Assy	
K350	70356330	Spring	
K360	70363345	S Soft Brake Lever	
K370	70356331	Spring	
K380	70326712	T Soft Brake Assy	
K390	70356332	Spring	
K402	70363462	Drive Lever	
K410	70366175	Cam Slider	
K420	70356333	Spring	
K430	70363347	Idle Up Down Lever	
K440	70363348	Idle Kick Lever	
K450	70363349	Idle Centering Lever	
K470	70363446	Cam Lever	
K480	70376040	FL Drive Slider	
K490	70324901	Cassette Holder Assy	
K530	70324887	Drive Arm Assy	
K550	70333457	Drive Lever Gear	
K562	70361608	Arm Brake Lever	
K564	70356339	Spring	
K570	70371988	Top Bracket	
K580	23712308	Screw	3x0.5x8mm
K590	70031483	Door Open Lever	
U501A	70070070	Screw	

LOCATION NUMBER	PART NUMBER	DESCRIPTION	
		- ELECTRICAL PARTS -	
0050	70095268	Main Assy	
■0005M		P C Board Assy	Main
		- INTEGRATED CIRCUITS -	
II050	70012805	IC	TDA9817
⚠IP050	70012894	IC	K324PG
IS001	70012895	IC	LA7286
IT001	70012910	IC	TMP90CS74EDF-6724
IT002	70011888	IC	TA7291S
IT003	70011887	IC	TB6515AP
IT004	70012489	IC	ST24C08/CB1
IT005	70011808	IC	PST7032MT
IV001	70012911	IC	LA71528AM
IV100	70012843	IC	LC89977M
IV401	70012824	IC	MM1226XFB
IV500	70012823	IC	LA7217M
IY001	70012842	IC	SDA5650X
IZ100	70012913	IC	TCE2ACU
		- TRANSISTORS -	
GT005	70010181	Transistor, Photo	PT493F
GT006	70010181	Transistor, Photo	PT493F
TI011	70010150	Transistor	BC848B
TI020	70011393	Transistor	MMBTH10LT1
TI055	70010150	Transistor	BC848B
TP020	70012897	Transistor, FET	STP3NA90
TP022	70010131	Transistor	BC337-40
TP023	70010142	Transistor	BC327-40
TP071	70010947	Transistor	BC858
TP082	70010947	Transistor	BC858
TP086	70010150	Transistor	BC848B
TS002	A6004020	Transistor, Chip	RN1402
TS004	A6004020	Transistor, Chip	RN1402
TS030	A6319311	Transistor	2SC1959-Y
TS050	A6319311	Transistor	2SC1959-Y
TS051	70010150	Transistor	BC848B
TS052	A6319311	Transistor	2SC1959-Y
TT001	A6004040	Transistor, Chip	RN1404
TT002	A6004040	Transistor, Chip	RN1404
TT003	70010150	Transistor	BC848B
TT004	70012032	Transistor, Chip	2SA1162GR
TT005	70011386	Transistor	2SA1020-Y
TT006	70010150	Transistor	BC848B
TT013	70010947	Transistor	BC858
TV001	70010150	Transistor	BC848B
TV002	A6004020	Transistor, Chip	RN1402
TV003	70010150	Transistor	BC848B
TV004	70010150	Transistor	BC848B
TV005	70010947	Transistor	BC858
TV008	70010150	Transistor	BC848B
TV009	70011788	Transistor, Chip	RN2402
TV010	A6004020	Transistor, Chip	RN1402
TV012	70010150	Transistor	BC848B
TV013	70010947	Transistor	BC858
TV014	70010150	Transistor	BC848B
TV401	70010947	Transistor	BC858
TV402	70010150	Transistor	BC848B
TV403	70010947	Transistor	BC858
TV404	A6004020	Transistor, Chip	RN1402
TV405	70010947	Transistor	BC858
TW001	70010150	Transistor	BC848B
TW002	A6014030	Transistor, Chip	RN2403
TW003	A6325549	Transistor	2SC2236-Y
TW004	70012921	Transistor	2SC3279M
TW005	70012920	Transistor	2SA1300GR
TW006	70010134	Transistor	BC548B
TW007	70010134	Transistor	BC548B
TW008	70011788	Transistor, Chip	RN2402
TW009	70010131	Transistor	BC337-40
TW010	70010142	Transistor	BC327-40
TW011	70010150	Transistor	BC848B
TX350	A6004020	Transistor, Chip	RN1402
TX351	70011788	Transistor, Chip	RN2402
TX352	A6004020	Transistor, Chip	RN1402

LOCATION NUMBER	PART NUMBER	DESCRIPTION	
TZ001	A6004020	Transistor, Chip	RN1402
TZ010	A6004020	Transistor, Chip	RN1402
TZ019	A6004020	Transistor, Chip	RN1402
TZ020	A6004020	Transistor, Chip	RN1402
TZ032	70010150	Transistor	BC848B
TZ033	70010947	Transistor	BC858
TZ034	70010947	Transistor	BC858
		- DIODES -	
DP001	70012827	Diode	BYW27-1000
DP002	70012827	Diode	BYW27-1000
DP003	70012827	Diode	BYW27-1000
DP004	70012827	Diode	BYW27-1000
DP005	70012923	Diode, Zener	BZX55B43
⚠DP006	70012923	Diode, Zener	BZX55B43
DP018	70012760	Diode	LS4148
DP019	70010153	Diode	1N4148
DP020	70010957	Diode, Zener	ZPD10
DP025	70012434	Diode	BAV20
DP029	70010957	Diode, Zener	ZPD10
DP031	70012679	Diode	FR104
DP037	70012760	Diode	LS4148
DP040	70012434	Diode	BAV20
⚠DP044	70010957	Diode, Zener	ZPD10
DP051	70012679	Diode	FR104
DP053	70012434	Diode	BAV20
DP054	70012922	Diode, Zener	BZX55B27
DP056	70012434	Diode	BAV20
DP061	70012679	Diode	FR104
DP064	70012630	Diode	1N5822
DP066	70012907	Diode	SR560
DP067	70012810	Diode	MA2062
DP070	70012760	Diode	LS4148
DP071	70012760	Diode	LS4148
DP073	70012509	Diode, Zener	MTZJ4.7C
DP081	70012760	Diode	LS4148
DP082	70012760	Diode	LS4148
DT013	70012760	Diode	LS4148
DV002	70012761	Diode	LS4448
DV003	70012761	Diode	LS4448
DV166	70012760	Diode	LS4148
DV167	70012760	Diode	LS4148
DW001	70011967	Diode, Zener	ZPD12
DW002	70012760	Diode	LS4148
DW003	70012822	Diode	RLS4153
DW004	70011440	Diode	ZP5.1
DW086	70012342	Diode	1N4001
DW087	70012342	Diode	1N4001
DX351	70012760	Diode	LS4148
DX352	70010153	Diode	1N4148
DZ002	70012760	Diode	LS4148
DZ004	70012760	Diode	LS4148
DZ005	70012760	Diode	LS4148
GT002	70010180	Diode, LED	GL451V
RX358	70012914	Diode, Zener	ZMM6.2
		- COILS -	
LI040	70012918	Coil	
LP057	70012095	Coil, Peaking	
LP064	70012428	Coil, Peaking	
LP066	70012429	Coil, Peaking	
LS001	70012915	Coil	
LS002	70011594	Coil, Peaking	
LS030	70012909	Coil	
LS050	70012460	Coil, Bias Oscillator	
LT001	70011953	Coil, Peaking	
LT002	23237981	Coil, Peaking	TRF4330AC
LT004	70011953	Coil, Peaking	
LV001	23237976	Coil, Peaking	TRF4820AC
LV003	70012918	Coil	
LV004	70012918	Coil	
LV005	70012918	Coil	
LV007	70012904	Coil	
LV014	70012916	Coil	
LV401	70012919	Coil	
LV402	70012917	Coil	
LV403	70011849	Coil, Peaking	

LOCATION NUMBER	PART NUMBER	DESCRIPTION		
LV410	70012918	Coil		
LV500	23237967	Coil, Peaking	TRF4471AC	
LY001	70012918	Coil		
LZ004	70012904	Coil		
LZ005	23238714	Coil, Peaking	TRF4100AJ	
LZ011	23238714	Coil, Peaking	TRF4100AJ	
LZ032	70010273	Coil, Peaking		
		- CAPACITORS -		
CI001	70041629	Cap, Chip	1nF	M 50V
CI013	70041657	Cap, Chip	22nF	K 25V
CI015	70041657	Cap, Chip	22nF	K 25V
CI020	70041328	Cap, Chip	100nF	Z 25V
CI021	70041629	Cap, Chip	1nF	M 50V
CI022	70041657	Cap, Chip	22nF	K 25V
CI024	70042390	Cap, Electrolytic	2.2μF	M 35V
CI025	70042284	Cap, Electrolitic	2.2μF	M 50V
CI026	70042234	Cap, Chip	220nF	Z 16V
CI027	70041596	Cap, Chip	10nF	K 50V
CI028	70042153	Cap, Electrolytic	22μF	M 16V
CI041	70041629	Cap, Chip	1nF	M 50V
CI043	70041328	Cap, Chip	100nF	Z 25V
CI063	70041596	Cap, Chip	10nF	K 50V
CI069	70041713	Cap, Electrolytic	100μF	M 16V
CI070	24285103	Cap, Chip	0.01μF	K 50V
CI077	70041328	Cap, Chip	100nF	Z 25V
⚠CP001	70042150	Cap, Plastic	100nF	M
⚠CP010	70042377	Cap, Electrolytic	47μF	M 385V
CP011	70042328	Cap, Electrolytic	4.7μF	M
CP019	70042387	Cap	8200pF	M 50V
CP020	70042149	Cap, Chip	6.8nF	M 50V
CP021	70042362	Cap	2200pF	1kV
CP022	70041155	Cap, Chip	1.5nF	J 50V
CP024	70041931	Cap, Ceramic	470pF	K 400V
CP025	70042328	Cap, Electrolytic	4.7μF	M
CP026	70041015	Cap, Chip	10nF	M 50V
CP031	70042328	Cap, Electrolytic	4.7μF	M
CP038	70042345	Cap, Chip	220pF	J 50V
CP040	70042327	Cap, Electrolytic	1μF	M
CP041	70041271	Cap, Chip	2.2nF	K 50V
⚠CP050	70042379	Cap	1000pF	M 250V
CP051	24793101	Cap, Electrolytic	100μF	M 10V
CP053	70040096	Cap, Ceramic	470pF	M 400V
CP054	70042353	Cap, Electrolytic	33μF	M 50V
CP056	70040096	Cap, Ceramic	470pF	M 400V
CP057	70041500	Cap, Electrolytic	47μF	M 50V
CP058	70041500	Cap, Electrolytic	47μF	M 50V
CP061	70042167	Cap, Electrolytic	220μF	M 35V
CP064	70042152	Cap, Electrolytic	0.001F	M 25V
CP065	70040725	Cap, Electrolytic	100μF	M 25V
CP066	70042381	Cap, Electrolytic	4700μF	M 10V
CP067	24794102	Cap, Electrolytic	1000μF	M 16V
CP068	70040725	Cap, Electrolytic	100μF	M 25V
CP071	70042327	Cap, Electrolytic	1μF	M
CP081	70042327	Cap, Electrolytic	1μF	M
CP082	70042327	Cap, Electrolytic	1μF	M
CS001	70041639	Cap, Electrolytic	4.7μF	M 16V
CS002	70041301	Cap, Electrolytic	22μF	M 16V
CS003	70041596	Cap, Chip	10nF	K 50V
CS004	70041328	Cap, Chip	100nF	Z 25V
CS005	70041328	Cap, Chip	100nF	Z 25V
CS006	70042121	Cap, Electrolytic	10μF	M 6.3V
CS009	70041328	Cap, Chip	100nF	Z 25V
CS010	70041639	Cap, Electrolytic	4.7μF	M 16V
CS011	24206010	Cap, Electrolytic	1μF	M 50V
CS013	24203100	Cap, Electrolytic	10μF	M 16V
CS014	70041648	Cap, Chip	1000pF	J 50V
CS015	24815152	Cap, Chip	1500pF	K 50V
CS017	70041704	Cap, Chip	47nF	K 10V
CS018	70041704	Cap, Chip	47nF	K 10V
CS019	70041596	Cap, Chip	10nF	K 50V
CS020	24203470	Cap, Electrolytic	47μF	M 16V
CS022	24815152	Cap, Chip	1500pF	K 50V
CS023	70042112	Cap, Electrolytic	47μF	M 16V
CS024	24815272	Cap, Chip	2700pF	K 50V
CS025	24774101	Cap, Chip	100pF	J 50V

LOCATION NUMBER	PART NUMBER	DESCRIPTION		
CS026	70041704	Cap, Chip	47nF	K 10V
CS030	24203470	Cap, Electrolytic	47μF	M 16V
CS031	70041596	Cap, Chip	10nF	K 50V
CS032	70041596	Cap, Chip	10nF	K 50V
CS033	70042382	Cap	18nF	J 50V
CS050	70041596	Cap, Chip	10nF	K 50V
CS051	24815272	Cap, Chip	2700pF	K 50V
CS052	70041596	Cap, Chip	10nF	K 50V
CS053	24203470	Cap, Electrolytic	47μF	M 16V
CS054	70041977	Cap, Plastic	82nF	J 50V
CT001	70041328	Cap, Chip	100nF	Z 25V
CT002	70041596	Cap, Chip	10nF	K 50V
CT003	70041630	Cap, Chip	1nF	J 50V
CT004	70041648	Cap, Chip	1000pF	J 50V
CT005	24285103	Cap, Chip	0.01μF	K 50V
CT006	70041596	Cap, Chip	10nF	K 50V
CT007	24285103	Cap, Chip	0.01μF	K 50V
CT008	70042373	Cap, Electrolytic	100μF	M 16V
CT009	70042112	Cap, Electrolytic	47μF	M 16V
CT010	24815222	Cap, Chip	2200pF	K 50V
CT011	70041328	Cap, Chip	100nF	Z 25V
CT012	24774090	Cap, Chip	9pF	D 50V
CT013	70041323	Cap, Chip	8pF	C 50V
CT014	70041596	Cap, Chip	10nF	K 50V
CT015	70041596	Cap, Chip	10nF	K 50V
CT016	70041328	Cap, Chip	100nF	Z 25V
CT017	70041328	Cap, Chip	100nF	Z 25V
CT018	70041328	Cap, Chip	100nF	Z 25V
CT020	70041328	Cap, Chip	100nF	Z 25V
CT021	70041648	Cap, Chip	1000pF	J 50V
CT022	70041648	Cap, Chip	1000pF	J 50V
CT023	70041037	Cap, Electrolytic	47μF	M 16V
CT024	24774151	Cap, Chip	150pF	J 50V
CT025	70041130	Cap, Chip	470nF	Z 16V
CT026	70041130	Cap, Chip	470nF	Z 16V
CT027	24774101	Cap, Chip	100pF	J 50V
CT028	24774101	Cap, Chip	100pF	J 50V
CT029	70042122	Cap, Electrolytic	1μF	M 50V
CT030	70042122	Cap, Electrolytic	1μF	M 50V
CT031	70041183	Cap, Electrolytic	47μF	M 16V
CT032	70040998	Cap, Chip	100nF	Z 25V
CT034	70042345	Cap, Chip	220pF	J 50V
CT035	70042345	Cap, Chip	220pF	J 50V
CT037	24774100	Cap, Chip	10pF	D 50V
CT039	70042386	Cap	200pF	J 50V
CT040	24774101	Cap, Chip	100pF	J 50V
CT041	24774470	Cap, Chip	47pF	J 50V
CT042	24774470	Cap, Chip	47pF	J 50V
CT043	70042256	Cap, Electrolytic	3300μF	M 6.3V
CT044	70042222	Cap, Electrolytic	470μF	M 10V
CT046	70041328	Cap, Chip	100nF	Z 25V
CT049	70041596	Cap, Chip	10nF	K 50V
CT050	70040998	Cap, Chip	100nF	Z 25V
CT060	70040530	Cap, Electrolytic	100μF	M 16V
CT070	70041596	Cap, Chip	10nF	K 50V
CT071	24774090	Cap, Chip	9pF	D 50V
CT072	70041328	Cap, Chip	100nF	Z 25V
CT076	70042386	Cap	200pF	J 50V
CT077	70042386	Cap	200pF	J 50V
CV001	70041298	Cap, Electrolytic	1μF	M 50V
CV002	70042205	Cap, Chip	27nF	K
CV003	70041692	Cap, Chip	0.022μF	Z 50V
CV004	70041596	Cap, Chip	10nF	K 50V
CV005	24783200	Cap, Chip	20pF	J 50V
CV006	24814103	Cap, Chip	0.01μF	Z 50V
CV008	70041532	Cap, Chip	330pF	J 50V
CV009	70041692	Cap, Chip	0.022μF	Z 50V
CV010	24287103	Cap, Chip	0.01μF	Z 50V
CV011	70042386	Cap	200pF	J 50V
CV012	70042101	Cap, Electrolytic	1μF	M 50V
CV013	24774390	Cap, Chip	39pF	J 50V
CV014	70041328	Cap, Chip	100nF	Z 25V
CV015	24092178	Cap, Chip	0.1μF	K 25V
CV016	70041316	Cap, Electrolytic	1μF	M 50V
CV017	24814103	Cap, Chip	0.01μF	Z 50V

LOCATION NUMBER	PART NUMBER	DESCRIPTION		
CV018	70041640	Cap, Electrolytic	10μF	M 50V
CV019	24774330	Cap, Chip	33pF	J 50V
CV020	70041713	Cap, Electrolytic	100μF	M 16V
CV021	70041328	Cap, Chip	100nF	Z 25V
CV022	70040998	Cap, Chip	100nF	Z 25V
CV023	24797100	Cap, Electrolytic	10μF	M 50V
CV024	70042101	Cap, Electrolytic	1μF	M 50V
CV025	70042279	Cap, Electrolytic	1μF	M 50V
CV027	24814103	Cap, Chip	0.01μF	Z 50V
CV028	70040725	Cap, Electrolytic	100μF	M 25V
CV029	70041328	Cap, Chip	100nF	Z 25V
CV030	70042279	Cap, Electrolytic	1μF	M 50V
CV031	70041657	Cap, Chip	22nF	K 25V
CV032	70042101	Cap, Electrolytic	1μF	M 50V
CV033	70041298	Cap, Electrolytic	1μF	M 50V
CV034	24814103	Cap, Chip	0.01μF	Z 50V
CV035	70041657	Cap, Chip	22nF	K 25V
CV036	70041704	Cap, Chip	47nF	K 10V
CV037	70042153	Cap, Electrolytic	22μF	M 16V
CV038	70041692	Cap, Chip	0.022μF	Z 50V
CV039	24774101	Cap, Chip	100pF	J 50V
CV047	70041328	Cap, Chip	100nF	Z 25V
CV050	24774560	Cap, Chip	56pF	J 50V
CV051	70041692	Cap, Chip	0.022μF	Z 50V
CV052	70040725	Cap, Electrolytic	100μF	M 25V
CV053	70040998	Cap, Chip	100nF	Z 25V
CV054	24287103	Cap, Chip	0.01μF	Z 50V
CV055	24814103	Cap, Chip	0.01μF	Z 50V
CV057	24287103	Cap, Chip	0.01μF	Z 50V
CV058	70041596	Cap, Chip	10nF	K 50V
CV059	24092178	Cap, Chip	0.1μF	K 25V
CV061	70041704	Cap, Chip	47nF	K 10V
CV063	70040980	Cap, Chip	100pF	J 50V
CV064	70041328	Cap, Chip	100nF	Z 25V
CV065	24783101	Cap, Chip	100pF	J 50V
CV068	70041704	Cap, Chip	47nF	K 10V
CV083	70041640	Cap, Electrolytic	10μF	M 50V
CV084	24814103	Cap, Chip	0.01μF	Z 50V
CV087	24774101	Cap, Chip	100pF	J 50V
CV102	24815102	Cap, Chip	1000pF	K 50V
CV132	70040493	Cap, Chip	10nF	K 50V
CV133	24774820	Cap, Chip	82pF	J 50V
CV140	24783820	Cap, Chip	82pF	J 50V
CV401	24783330	Cap, Chip	33pF	J 50V
CV404	70041530	Cap, Chip	330nF	Z 16V
CV405	24815152	Cap, Chip	1500pF	K 50V
CV407	70041323	Cap, Chip	8pF	C 50V
CV409	24774120	Cap, Chip	12pF	J 50V
CV410	24794101	Cap, Electrolytic	100μF	M 16V
CV412	70042263	Cap, Chip	18pF	J 50V
CV413	70041923	Cap, Chip	75pF	J 50V
CV416	70041530	Cap, Chip	330nF	Z 16V
CV501	70042122	Cap, Electrolytic	1μF	M 50V
CV502	70042161	Cap, Chip	56nF	K 16V
CV503	70041657	Cap, Chip	22nF	K 25V
CV504	70040982	Cap, Chip	820pF	J 50V
CV505	24814103	Cap, Chip	0.01μF	Z 50V
CV506	70041328	Cap, Chip	100nF	Z 25V
CV507	70041570	Cap, Electrolytic	100μF	M 10V
CV508	70042122	Cap, Electrolytic	1μF	M 50V
CV509	70042385	Cap	43pF	J 50V
CW001	24203100	Cap, Electrolytic	10μF	M 16V
CW002	70041713	Cap, Electrolytic	100μF	M 16V
CW003	70040738	Cap, Electrolytic	4.7μF	25V
CW004	70042112	Cap, Electrolytic	47μF	M 16V
CW008	24794101	Cap, Electrolytic	100μF	M 16V
CY001	24774151	Cap, Chip	150pF	J 50V
CY002	70042376	Cap, Ceramic	0.33μF	K
CY003	70041865	Cap, Chip	33nF	Z
CY004	70040998	Cap, Chip	100nF	Z 25V
CY005	70040530	Cap, Electrolytic	100μF	M 16V
CY006	70040530	Cap, Electrolytic	100μF	M 16V
CY007	70040998	Cap, Chip	100nF	Z 25V
CY010	24815222	Cap, Chip	2200pF	K 50V
CZ010	70041596	Cap, Chip	10nF	K 50V

LOCATION NUMBER	PART NUMBER	DESCRIPTION		
CZ011	24815222	Cap, Chip	2200pF	K 50V
CZ015	70041500	Cap, Electrolytic	47μF	M 50V
CZ018	24203100	Cap, Electrolytic	10μF	M 16V
CZ021	70041629	Cap, Chip	1nF	M 50V
CZ033	24794101	Cap, Electrolytic	100μF	M 16V
CZ072	70041328	Cap, Chip	100nF	Z 25V
CZ076	70042319	Cap	270pF	K
CZ101	70040998	Cap, Chip	100nF	Z 25V
CZ105	70041156	Cap, Chip	330nF	Z 25V
		- RESISTORS -		
DI003	70041096	Chip Jumper		
DI041	70041096	Chip Jumper		
DZ003	70041093	Chip Jumper		
PI050	70042314	Res, Variable	22kΩ	
RI001	24872100	Res, Chip	10Ω	J 1/16W
RI004	24872181	Res, Chip	180Ω	J 1/16W
RI011	24872181	Res, Chip	180Ω	J 1/16W
RI012	24872330	Res, Chip	33Ω	J 1/16W
RI013	24872682	Res, Chip	6.8kΩ	J 1/16W
RI014	24872222	Res, Chip	2.2kΩ	J 1/16W
RI019	24872391	Res, Chip	390Ω	J 1/16W
RI020	24872332	Res, Chip	3.3kΩ	J 1/16W
RI021	24872102	Res, Chip	1kΩ	J 1/16W
RI022	70040342	Res, Chip	12Ω	J 1/16W
RI023	24872220	Res, Chip	22Ω	J 1/16W
RI024	24872101	Res, Chip	100Ω	J 1/16W
RI025	24872470	Res, Chip	47Ω	J 1/16W
RI053	24872331	Res, Chip	330Ω	J 1/16W
RI054	24872562	Res, Chip	5.6kΩ	J 1/16W
RI055	70041096	Chip Jumper		
RI065	24872331	Res, Chip	330Ω	J 1/16W
RI066	24872561	Res, Chip	560Ω	J 1/16W
RI067	24872332	Res, Chip	3.3kΩ	J 1/16W
RI068	24872271	Res, Chip	270Ω	J 1/16W
RI069	24871332	Res, Chip	3.3kΩ	J 1/8W
RI070	24872682	Res, Chip	6.8kΩ	J 1/16W
RI071	24871103	Res, Chip	10kΩ	J 1/8W
RI077	24872273	Res, Chip	27kΩ	J 1/16W
RI078	24872273	Res, Chip	27kΩ	J 1/16W
RI080	24872472	Res, Chip	4.7kΩ	J 1/16W
RI083	70041096	Chip Jumper		
RI086	70041096	Chip Jumper		
RP004	24871184	Res, Chip	180kΩ	J 1/8W
RP005	24871184	Res, Chip	180kΩ	J 1/8W
RP006	24871184	Res, Chip	180kΩ	J 1/8W
RP007	24871184	Res, Chip	180kΩ	J 1/8W
RP008	24871184	Res, Chip	180kΩ	J 1/8W
RP009	24871184	Res, Chip	180kΩ	J 1/8W
RP011	24871474	Res, Chip	470kΩ	J 1/8W
RP012	24871681	Res, Chip	680Ω	J 1/8W
RP013	24871681	Res, Chip	680Ω	J 1/8W
RP014	24871681	Res, Chip	680Ω	J 1/8W
RP018	70041093	Chip Jumper		
RP019	70041969	Res, Carbon	2kΩ	J 1/4W
RP020	70042315	Res	4.7	J
RP021	70042341	Res	22	J 1/4W
RP022	24871273	Res, Chip	27kΩ	J 1/8W
RP025	24871101	Res, Chip	100Ω	J 1/8W
RP026	24871102	Res, Chip	1kΩ	J 1/8W
RP027	70041665	Res, Carbon	5.6kΩ	J 1/4W
RP028	70042391	Res	10Ω	J 1/4W
RP029	24871223	Res, Chip	22kΩ	J 1/8W
RP030	70040854	Res, Carbon	22kΩ	J 0.2W
RP033	70042363	Res	1kΩ	J 1/4W
RP035	24871102	Res, Chip	1kΩ	J 1/8W
RP037	70040106	Res, Carbon	10kΩ	J 1/4W
RP038	24871101	Res, Chip	100Ω	J 1/8W
RP040	24871102	Res, Chip	1kΩ	J 1/8W
RP041	70040702	Res, Carbon	12kΩ	J 1/4W
RP052	70042383	Res	1Ω	K
⚠RP053	70041078	Res, Fusible	1.5Ω	J 0.3W
RP056	70041078	Res, Fusible	1.5Ω	J 0.3W
⚠RP058	70041074	Res, Fusible	27Ω	J 0.3W
RP065	70040841	Res, Carbon	220Ω	J 1/4W
RP067	70042384	Res	680Ω	G

LOCATION NUMBER	PART NUMBER	DESCRIPTION		
RP068	70042388	Res	2.2kΩ	G
RP069	70041093	Chip Jumper		
RP071	24871101	Res, Chip	100Ω	J 1/8W
RP072	70041093	Chip Jumper		
RP073	24871331	Res, Chip	330Ω	J 1/8W
RP077	70042363	Res	1kΩ	J 1/4W
RP081	24871100	Res, Chip	10Ω	J 1/8W
RP082	24872104	Res, Chip	100kΩ	J 1/16W
RP083	24872473	Res, Chip	47kΩ	J 1/16W
RP084	24871474	Res, Chip	470kΩ	J 1/8W
RP085	24872102	Res, Chip	1kΩ	J 1/16W
RP086	24872103	Res, Chip	10kΩ	J 1/16W
RP087	24872103	Res, Chip	10kΩ	J 1/16W
RS001	24872151	Res, Chip	150Ω	J 1/16W
RS003	24872334	Res, Chip	330kΩ	J 1/16W
RS004	24872123	Res, Chip	12kΩ	J 1/16W
RS005	24871562	Res, Chip	5.6kΩ	J 1/8W
RS006	24872472	Res, Chip	4.7kΩ	J 1/16W
RS007	24872125	Res, Chip	1.2MΩ	J 1/16W
RS008	24872273	Res, Chip	27kΩ	J 1/16W
RS009	24872222	Res, Chip	2.2kΩ	J 1/16W
RS010	70040850	Res, Carbon	2.7kΩ	J
RS011	24872272	Res, Chip	2.7kΩ	J 1/16W
RS012	24872471	Res, Chip	470Ω	J 1/16W
RS013	24872202	Res, Chip	2kΩ	J 1/16W
RS014	24872273	Res, Chip	27kΩ	J 1/16W
RS016	24871151	Res, Chip	150Ω	J 1/8W
RS017	24872123	Res, Chip	12kΩ	J 1/16W
RS019	24872103	Res, Chip	10kΩ	J 1/16W
RS020	24872103	Res, Chip	10kΩ	J 1/16W
RS031	24871470	Res, Chip	47Ω	J 1/8W
RS032	24872273	Res, Chip	27kΩ	J 1/16W
RS033	24871479	Res, Chip	4.7Ω	J 1/8W
RS034	24872181	Res, Chip	180Ω	J 1/16W
RS036	70042391	Res	10Ω	J 1/4W
RS050	70041671	Res, Fusible	18Ω	J 0.3W
RS051	24872101	Res, Chip	100Ω	J 1/16W
RS052	24872563	Res, Chip	56kΩ	J 1/16W
RS053	24871479	Res, Chip	4.7Ω	J 1/8W
RS054	24871152	Res, Chip	1.5kΩ	J 1/8W
RS055	24872152	Res, Chip	1.5kΩ	J 1/16W
RT001	24871221	Res, Chip	220Ω	J 1/8W
RT002	24872103	Res, Chip	10kΩ	J 1/16W
RT003	24872113	Res, Chip	11kΩ	J 1/16W
RT004	70040702	Res, Carbon	12kΩ	J 1/4W
RT005	24871473	Res, Chip	47kΩ	J 1/8W
RT006	70041708	Res, Carbon	47kΩ	J 1/4W
RT007	24871103	Res, Chip	10kΩ	J 1/8W
RT008	24871229	Res, Chip	2.2Ω	J 1/8W
RT009	24871229	Res, Chip	2.2Ω	J 1/8W
RT010	24872472	Res, Chip	4.7kΩ	J 1/16W
RT011	24871821	Res, Chip	820Ω	J 1/8W
RT012	24872103	Res, Chip	10kΩ	J 1/16W
RT013	24872472	Res, Chip	4.7kΩ	J 1/16W
RT014	70042025	Res, Carbon	110kΩ	J 1/4W
RT015	24872114	Res, Chip	110kΩ	J 1/16W
RT017	24871201	Res, Chip	200Ω	J 1/8W
RT018	24871201	Res, Chip	200Ω	J 1/8W
RT019	24871103	Res, Chip	10kΩ	J 1/8W
RT020	24871103	Res, Chip	10kΩ	J 1/8W
RT022	24872102	Res, Chip	1kΩ	J 1/16W
RT023	24872472	Res, Chip	4.7kΩ	J 1/16W
RT024	24872472	Res, Chip	4.7kΩ	J 1/16W
RT025	24872472	Res, Chip	4.7kΩ	J 1/16W
RT027	70040845	Res, Carbon	680Ω	J 1/4W
RT030	70040118	Res, Carbon	4.7kΩ	J 1/4W
RT031	24871821	Res, Chip	820Ω	J 1/8W
RT032	24871562	Res, Chip	5.6kΩ	J 1/8W
RT033	70041665	Res, Carbon	5.6kΩ	J 1/4W
RT034	24871273	Res, Chip	27kΩ	J 1/8W
RT035	24871273	Res, Chip	27kΩ	J 1/8W
RT036	70042369	Res	330Ω	J 1/2W
RT037	24872181	Res, Chip	180Ω	J 1/16W
RT041	24872471	Res, Chip	470Ω	J 1/16W
RT042	24872684	Res, Chip	680kΩ	J 1/16W

LOCATION NUMBER	PART NUMBER	DESCRIPTION		
RT043	24872224	Res, Chip	220kΩ	J 1/16W
RT044	24872105	Res, Chip	1MΩ	J 1/16W
RT045	24872105	Res, Chip	1MΩ	J 1/16W
RT046	24872563	Res, Chip	56kΩ	J 1/16W
RT047	24871182	Res, Chip	1.8kΩ	J 1/8W
RT048	24871182	Res, Chip	1.8kΩ	J 1/8W
RT049	24872563	Res, Chip	56kΩ	J 1/16W
RT051	24871182	Res, Chip	1.8kΩ	J 1/8W
RT052	24872102	Res, Chip	1kΩ	J 1/16W
RT053	24872102	Res, Chip	1kΩ	J 1/16W
RT063	24872221	Res, Chip	220Ω	J 1/16W
RT064	24872221	Res, Chip	220Ω	J 1/16W
RT065	24872222	Res, Chip	2.2kΩ	J 1/16W
RT066	24872222	Res, Chip	2.2kΩ	J 1/16W
RT067	24871471	Res, Chip	470Ω	J 1/8W
RT068	24872101	Res, Chip	100Ω	J 1/16W
RT069	24872222	Res, Chip	2.2kΩ	J 1/16W
RT072	24872103	Res, Chip	10kΩ	J 1/16W
RT073	24872473	Res, Chip	47kΩ	J 1/16W
RT074	24872303	Res, Chip	30kΩ	J 1/16W
RT075	24872102	Res, Chip	1kΩ	J 1/16W
RT076	24871221	Res, Chip	220Ω	J 1/8W
RT077	24871221	Res, Chip	220Ω	J 1/8W
RT081	24872101	Res, Chip	100Ω	J 1/16W
RT083	24871272	Res, Chip	2.7kΩ	J 1/8W
RT084	24871182	Res, Chip	1.8kΩ	J 1/8W
RT085	70042024	Res, Carbon	1.8kΩ	J 1/4W
RT090	70040099	Res, Carbon	6.8kΩ	J 1/4W
RT091	24872102	Res, Chip	1kΩ	J 1/16W
RT093	24871102	Res, Chip	1kΩ	J 1/8W
RT095	70041096	Chip Jumper		
RT100	24871272	Res, Chip	2.7kΩ	J 1/8W
RT102	24872472	Res, Chip	4.7kΩ	J 1/16W
RT103	24872472	Res, Chip	4.7kΩ	J 1/16W
RT104	24872561	Res, Chip	560Ω	J 1/16W
RT105	24872101	Res, Chip	100Ω	J 1/16W
RT106	24872472	Res, Chip	4.7kΩ	J 1/16W
RT107	24871561	Res, Chip	560Ω	J 1/8W
RT108	24872222	Res, Chip	2.2kΩ	J 1/16W
RT109	24872561	Res, Chip	560Ω	J 1/16W
RT110	24871102	Res, Chip	1kΩ	J 1/8W
RV001	24871471	Res, Chip	470Ω	J 1/8W
RV002	24872431	Res, Chip	430Ω	J 1/16W
RV003	24872152	Res, Chip	1.5kΩ	J 1/16W
RV004	24872102	Res, Chip	1kΩ	J 1/16W
RV005	70041354	Res, Chip	3.9kΩ	J 1/8W
RV006	24872152	Res, Chip	1.5kΩ	J 1/16W
RV007	24872102	Res, Chip	1kΩ	J 1/16W
RV008	24872183	Res, Chip	18kΩ	J 1/16W
RV009	24872103	Res, Chip	10kΩ	J 1/16W
RV010	24872152	Res, Chip	1.5kΩ	J 1/16W
RV011	24872472	Res, Chip	4.7kΩ	J 1/16W
RV012	24872122	Res, Chip	1.2kΩ	J 1/16W
RV013	70041096	Chip Jumper		
RV014	70041096	Chip Jumper		
RV015	24872122	Res, Chip	1.2kΩ	J 1/16W
RV016	24872822	Res, Chip	8.2kΩ	J 1/16W
RV017	24872182	Res, Chip	1.8kΩ	J 1/16W
RV018	24872132	Res, Chip	1.3kΩ	J 1/16W
RV019	24872152	Res, Chip	1.5kΩ	J 1/16W
RV020	24872222	Res, Chip	2.2kΩ	J 1/16W
RV027	24872152	Res, Chip	1.5kΩ	J 1/16W
RV028	24871222	Res, Chip	2.2kΩ	J 1/8W
RV031	70042389	Res	560kΩ	K
RV032	24872104	Res, Chip	100kΩ	J 1/16W
RV033	24872683	Res, Chip	68kΩ	J 1/16W
RV035	24872473	Res, Chip	47kΩ	J 1/16W
RV036	70041096	Chip Jumper		
RV037	24871472	Res, Chip	4.7kΩ	J 1/8W
RV038	24872223	Res, Chip	22kΩ	J 1/16W
RV039	24872123	Res, Chip	12kΩ	J 1/16W
RV040	24871339	Res, Chip	3.3Ω	J 1/8W
RV041	24872102	Res, Chip	1kΩ	J 1/16W
RV042	24872102	Res, Chip	1kΩ	J 1/16W
RV043	24872102	Res, Chip	1kΩ	J 1/16W

LOCATION NUMBER	PART NUMBER	DESCRIPTION		
RV047	24872561	Res, Chip	560Ω	J 1/16W
RV050	24871820	Res, Chip	82Ω	J 1/8W
RV053	24872332	Res, Chip	3.3kΩ	J 1/16W
RV055	24872221	Res, Chip	220Ω	J 1/16W
RV056	24872271	Res, Chip	270Ω	J 1/16W
RV060	24872124	Res, Chip	120kΩ	J 1/16W
RV066	24872473	Res, Chip	47kΩ	J 1/16W
RV067	24872473	Res, Chip	47kΩ	J 1/16W
RV081	24872123	Res, Chip	12kΩ	J 1/16W
RV082	24872104	Res, Chip	100kΩ	J 1/16W
RV090	24871101	Res, Chip	100Ω	J 1/8W
RV096	24872222	Res, Chip	2.2kΩ	J 1/16W
RV097	24872222	Res, Chip	2.2kΩ	J 1/16W
RV102	70041093	Chip Jumper		
RV103	24872274	Res, Chip	270kΩ	J 1/16W
RV105	24872562	Res, Chip	5.6kΩ	J 1/16W
RV107	24872473	Res, Chip	47kΩ	J 1/16W
RV108	70041093	Chip Jumper		
RV114	70041096	Chip Jumper		
RV134	70040847	Res, Carbon	1.5kΩ	J
RV135	24872471	Res, Chip	470Ω	J 1/16W
RV136	24872222	Res, Chip	2.2kΩ	J 1/16W
RV140	70040844	Res, Carbon	1kΩ	J 1/4W
RV141	24872102	Res, Chip	1kΩ	J 1/16W
RV167	24872103	Res, Chip	10kΩ	J 1/16W
RV401	24872103	Res, Chip	10kΩ	J 1/16W
RV407	24872102	Res, Chip	1kΩ	J 1/16W
RV408	24872102	Res, Chip	1kΩ	J 1/16W
RV410	24872102	Res, Chip	1kΩ	J 1/16W
RV411	24872105	Res, Chip	1MΩ	J 1/16W
RV414	24872105	Res, Chip	1MΩ	J 1/16W
RV415	24872302	Res, Chip	3kΩ	J 1/16W
RV417	24872302	Res, Chip	3kΩ	J 1/16W
RV418	24872102	Res, Chip	1kΩ	J 1/16W
RV420	70041096	Chip Jumper		
RV421	24872561	Res, Chip	560Ω	J 1/16W
RV501	24872154	Res, Chip	150kΩ	J 1/16W
RV502	24872561	Res, Chip	560Ω	J 1/16W
RV503	24872392	Res, Chip	3.9kΩ	J 1/16W
RV504	24872103	Res, Chip	10kΩ	J 1/16W
RV505	24872472	Res, Chip	4.7kΩ	J 1/16W
RV506	24872472	Res, Chip	4.7kΩ	J 1/16W
RV945	70041096	Chip Jumper		
⚠RW001	70042047	Res, Chip	4.7kΩ	J 0.3W
RW002	70040118	Res, Carbon	4.7kΩ	J 1/4W
RW003	24872122	Res, Chip	1.2kΩ	J 1/16W
RW004	70042027	Res, Carbon	3kΩ	J 1/4W
RW005	70042027	Res, Carbon	3kΩ	J 1/4W
RW006	24871331	Res, Chip	330Ω	J 1/8W
RW007	24871331	Res, Chip	330Ω	J 1/8W
RW008	24872271	Res, Chip	270Ω	J 1/16W
RW009	24871181	Res, Chip	180Ω	J 1/8W
RW010	24871472	Res, Chip	4.7kΩ	J 1/8W
RW011	24871222	Res, Chip	2.2kΩ	J 1/8W
RW012	70041093	Chip Jumper		
RW013	24871223	Res, Chip	22kΩ	J 1/8W
RW014	24871123	Res, Chip	12kΩ	J 1/8W
RW015	70040785	Res, Carbon	5.6kΩ	J 1/4W
RW016	70040106	Res, Carbon	10kΩ	J 1/4W
RW017	24871272	Res, Chip	2.7kΩ	J 1/8W
RW018	24872103	Res, Chip	10kΩ	J 1/16W
RW019	24872472	Res, Chip	4.7kΩ	J 1/16W
RW021	24872472	Res, Chip	4.7kΩ	J 1/16W
RW026	24871331	Res, Chip	330Ω	J 1/8W
RW028	24871152	Res, Chip	1.5kΩ	J 1/8W
RW085	70042348	Res	1.5Ω	J
RX353	24872102	Res, Chip	1kΩ	J 1/16W
RX355	24872103	Res, Chip	10kΩ	J 1/16W
RX356	70041665	Res, Carbon	5.6kΩ	J 1/4W
RY001	24872222	Res, Chip	2.2kΩ	J 1/16W
RY002	24872105	Res, Chip	1MΩ	J 1/16W
RY003	24872125	Res, Chip	1.2MΩ	J 1/16W
RY004	24872682	Res, Chip	6.8kΩ	J 1/16W
RY006	24871104	Res, Chip	100kΩ	J 1/8W
RY009	24872682	Res, Chip	6.8kΩ	J 1/16W

LOCATION NUMBER	PART NUMBER	DESCRIPTION		
RY010	24872125	Res, Chip	1.2MΩ	J 1/16W
RY916	70041096	Chip Jumper		
RZ004	70041096	Chip Jumper		
RZ005	24872222	Res, Chip	2.2kΩ	J 1/16W
RZ009	24871102	Res, Chip	1kΩ	J 1/8W
RZ010	24872562	Res, Chip	5.6kΩ	J 1/16W
RZ011	70040850	Res, Carbon	2.7kΩ	J
RZ015	70042363	Res	1kΩ	J 1/4W
RZ019	24871122	Res, Chip	1.2kΩ	J 1/8W
RZ020	24872222	Res, Chip	2.2kΩ	J 1/16W
RZ032	24872102	Res, Chip	1kΩ	J 1/16W
RZ033	24872102	Res, Chip	1kΩ	J 1/16W
RZ034	24872331	Res, Chip	330Ω	J 1/16W
RZ035	24872102	Res, Chip	1kΩ	J 1/16W
RZ037	24872152	Res, Chip	1.5kΩ	J 1/16W
RZ038	24871561	Res, Chip	560Ω	J 1/8W
RZ039	24871102	Res, Chip	1kΩ	J 1/8W
RZ060	24872270	Res, Chip	27Ω	J 1/16W
RZ070	24871221	Res, Chip	220Ω	J 1/8W
RZ071	24871221	Res, Chip	220Ω	J 1/8W
RZ072	70040848	Res, Carbon	100kΩ	J
RZ076	24872471	Res, Chip	470Ω	J 1/16W
RZ105	24871103	Res, Chip	10kΩ	J 1/8W
RZ109	24872103	Res, Chip	10kΩ	J 1/16W
RZ110	24872103	Res, Chip	10kΩ	J 1/16W
RZ111	24872103	Res, Chip	10kΩ	J 1/16W
RZ112	24872103	Res, Chip	10kΩ	J 1/16W
RZ113	24872103	Res, Chip	10kΩ	J 1/16W
RZ114	24872222	Res, Chip	2.2kΩ	J 1/16W
RZ115	24872103	Res, Chip	10kΩ	J 1/16W
RZ116	24872103	Res, Chip	10kΩ	J 1/16W
JI003	70041093	Chip Jumper		
JI011	70041093	Chip Jumper		
JI017	70041093	Chip Jumper		
JI033	70041093	Chip Jumper		
JI045	70041093	Chip Jumper		
JI046	70041093	Chip Jumper		
JP008	70041093	Chip Jumper		
JP015	70041093	Chip Jumper		
JS020	70041093	Chip Jumper		
JS021	70041093	Chip Jumper		
JS022	70041093	Chip Jumper		
JS023	70041096	Chip Jumper		
JS024	70041093	Chip Jumper		
JS025	70041093	Chip Jumper		
JS027	70041096	Chip Jumper		
JS028	70041093	Chip Jumper		
JS030	70041093	Chip Jumper		
JT108	70041093	Chip Jumper		
JT109	70041093	Chip Jumper		
JT110	70041093	Chip Jumper		
JT111	70041093	Chip Jumper		
JT112	70041093	Chip Jumper		
JT113	70041096	Chip Jumper		
JT114	70041093	Chip Jumper		
JT116	70041096	Chip Jumper		
JT117	70041093	Chip Jumper		
JT118	70041096	Chip Jumper		
JT120	70041093	Chip Jumper		
JT123	70041093	Chip Jumper		
JT124	70041093	Chip Jumper		
JT125	70041093	Chip Jumper		
JT150	70041093	Chip Jumper		
JT151	70041093	Chip Jumper		
JT152	70041093	Chip Jumper		
JT153	70041093	Chip Jumper		
JT154	70041093	Chip Jumper		
JT157	70041096	Chip Jumper		
JT158	70041093	Chip Jumper		
JT159	70041093	Chip Jumper		
JT160	70041093	Chip Jumper		
JT161	70041093	Chip Jumper		
JT162	70041096	Chip Jumper		
JT163	70041093	Chip Jumper		
JT164	70041093	Chip Jumper		

LOCATION NUMBER	PART NUMBER	DESCRIPTION		
JT165	70041093	Chip Jumper		
JT166	70041093	Chip Jumper		
JT167	70041093	Chip Jumper		
JT168	70041093	Chip Jumper		
JT169	70041093	Chip Jumper		
JT171	70041093	Chip Jumper		
JT172	70041093	Chip Jumper		
JT173	70041096	Chip Jumper		
JT174	70041096	Chip Jumper		
JT175	70041093	Chip Jumper		
JT176	70041093	Chip Jumper		
JT177	70041096	Chip Jumper		
JT178	70041093	Chip Jumper		
JT179	70041093	Chip Jumper		
JT180	70041093	Chip Jumper		
JT181	70041093	Chip Jumper		
JT182	70041093	Chip Jumper		
JT315	70041096	Chip Jumper		
JV003	70041093	Chip Jumper		
JV021	70041093	Chip Jumper		
JV027	70041093	Chip Jumper		
JV028	70041096	Chip Jumper		
JV031	70041096	Chip Jumper		
JV037	70041093	Chip Jumper		
JV067	70041093	Chip Jumper		
JV073	70041093	Chip Jumper		
JV075	70041093	Chip Jumper		
JV108	70041093	Chip Jumper		
JV110	70041096	Chip Jumper		
JV120	70041093	Chip Jumper		
JV121	70041093	Chip Jumper		
JV125	70041096	Chip Jumper		
JV126	70041093	Chip Jumper		
JV128	70041093	Chip Jumper		
JV129	70041093	Chip Jumper		
JV130	70041093	Chip Jumper		
JV133	70041093	Chip Jumper		
JV137	70041093	Chip Jumper		
JV139	70041093	Chip Jumper		
JV146	70041093	Chip Jumper		
JV148	70041093	Chip Jumper		
JV154	70041093	Chip Jumper		
JV156	70041093	Chip Jumper		
JV157	70041093	Chip Jumper		
JV160	70041096	Chip Jumper		
JV400	70041093	Chip Jumper		
JV401	70041093	Chip Jumper		
JV402	70041096	Chip Jumper		
JW008	70041093	Chip Jumper		
JW011	70041096	Chip Jumper		
JW012	70041096	Chip Jumper		
JW015	70041093	Chip Jumper		
JW019	70041096	Chip Jumper		
JW020	70041096	Chip Jumper		
JW021	70041093	Chip Jumper		
JW022	70041093	Chip Jumper		
JW034	70041093	Chip Jumper		
JW041	70041096	Chip Jumper		
JW044	70041093	Chip Jumper		
JX001	70041093	Chip Jumper		
JY001	70041093	Chip Jumper		
JY004	70041096	Chip Jumper		
JZ001	70041093	Chip Jumper		
JZ002	70041093	Chip Jumper		
JZ005	70041093	Chip Jumper		
JZ006	70041096	Chip Jumper		
JZ044	70041093	Chip Jumper		
JZ075	70041093	Chip Jumper		
JZ100	70041093	Chip Jumper		
JZ104	70041093	Chip Jumper		
JZ106	70041096	Chip Jumper		
JZ203	70041093	Chip Jumper		
JZ204	70041096	Chip Jumper		
JZ206	70041093	Chip Jumper		
JZ207	70041093	Chip Jumper		
JZ209	70041096	Chip Jumper		
JZ213	70041093	Chip Jumper		
JZ220	70041096	Chip Jumper		
JZ221	70041093	Chip Jumper		
JZ226	70041093	Chip Jumper		
		- MISCELLANEOUS -		
0010M	70012896	Tuner		
0060M	70052220	Back Panel		
⚠BP001	70012912	Power Inlet		
BT001	70011830	Connector		
FI010	70012836	Filter		
FI020	70012857	Filter		
FI030	70012871	Coil		
FI090	70010706	Filter	6MHz	
⚠FP001	70010445	Fuse, 1A, 250V		
FP01A	70010597	Fuse Holder		
⚠FP051	70011781	IC Protector	ICP-N10	
GT001	70011828	Hall Sensor	HW300B	
GT003	70011793	Photo Interrupter	GP1S562	
GT004	70011793	Photo Interrupter	GP1S562	
GT02A	70051136	LED Holder		
⚠LP001	70012695	Line Filter		
⚠LP050	70012893	Power Transformer		
MT001	70031317	Stator		
QT001	70012888	Filter		
QT002	70010116	Crystal, 32kHz		
QT003	70011861	Crystal	16MHz	
QV002	70012889	Filter		
QV500	70012809	Resonator		
ST001	70011826	Switch, Push		
■0030M	70095270	P C Board Assy	Terminal/Audio	
		- INTEGRATED CIRCUITS -		
IN101	70012902	IC	TA1246AF	
IN102	70010980	IC	HEF4052BT	
IN103	70011903	IC	TA78L09S	
IN201	70012901	IC	MSP3416D	
IN202	70012900	IC	TL074CDP	
IN203	70011902	IC	TA78L008AP	
IX101	70011881	IC	STV6400	
		- TRANSISTORS -		
TN101	A6541130	Transistor, Chip	2SA1162-Y	
TN103	A6541130	Transistor, Chip	2SA1162-Y	
TN201	70010331	Transistor	BC847B	
TN202	A6541130	Transistor, Chip	2SA1162-Y	
TN203	70010331	Transistor	BC847B	
TN204	A6014040	Transistor, Chip	RN2404	
TN205	A6004040	Transistor, Chip	RN1404	
TN207	A6335470	Transistor, Chip	2SC2712-Y	
TN208	A6335470	Transistor, Chip	2SC2712-Y	
TX101	70010947	Transistor	BC858	
		- DIODES -		
DN202	70012760	Diode	LS4148	
DN204	70012760	Diode	LS4148	
DX101	70012760	Diode	LS4148	
DX102	70012760	Diode	LS4148	
		- COILS -		
LN201	70012903	Coil		
LN202	70012903	Coil		
LN203	70012904	Coil		
LN204	70012903	Coil		
LX101	70012903	Coil		
LX102	70012903	Coil		
LX103	70012905	Coil		
LX104	70012906	Coil		
		- CAPACITORS -		
CN101	70042132	Cap, Chip	560pF	K
CN102	70042132	Cap, Chip	560pF	K
CN105	70042277	Cap	22μF	
CN106	70041130	Cap, Chip	470nF	Z 16V
CN108	70041130	Cap, Chip	470nF	Z 16V
CN110	70042277	Cap	22μF	
CN111	70041130	Cap, Chip	470nF	Z 16V
CN112	70041130	Cap, Chip	470nF	Z 16V
CN113	70041042	Cap, Electrolytic	10μF	X

LOCATION NUMBER	PART NUMBER	DESCRIPTION		
CN114	24792331	Cap, Electrolytic	330μF	M 6.3V
CN115	24591103	Cap, Plastic	0.01μF	J 50V
CN116	70041042	Cap, Electrolytic	10μF	X
CN117	24591103	Cap, Plastic	0.01μF	J 50V
CN118	70041042	Cap, Electrolytic	10μF	X
CN119	24591103	Cap, Plastic	0.01μF	J 50V
CN120	70042277	Cap	22μF	
CN121	70042277	Cap	22μF	
CN124	24793101	Cap, Electrolytic	100μF	M 10V
CN125	70042380	Cap	100nF	Z
CN126	24203100	Cap, Electrolytic	10μF	M 16V
CN127	24591103	Cap, Plastic	0.01μF	J 50V
CN128	24203100	Cap, Electrolytic	10μF	M 16V
CN129	70041130	Cap, Chip	470nF	Z 16V
CN130	70041279	Cap, Chip	680pF	K 50V
CN131	24203100	Cap, Electrolytic	10μF	M 16V
CN132	70040493	Cap, Chip	10nF	K 50V
CN133	24792331	Cap, Electrolytic	330μF	M 6.3V
CN134	70041529	Cap, Chip	1μF	Z 16V
CN135	70042161	Cap, Chip	56nF	K 16V
CN136	70041130	Cap, Chip	470nF	Z 16V
CN137	70042277	Cap	22μF	
CN141	70041130	Cap, Chip	470nF	Z 16V
CN142	24203100	Cap, Electrolytic	10μF	M 16V
CN143	70041130	Cap, Chip	470nF	Z 16V
CN144	70041130	Cap, Chip	470nF	Z 16V
CN201	24203100	Cap, Electrolytic	10μF	M 16V
CN203	70041472	Cap, Chip	1nF	K 50V
CN204	24201220	Cap, Electrolytic	22μF	M 6.3V
CN205	70042132	Cap, Chip	560pF	K
CN206	70041472	Cap, Chip	1nF	K 50V
CN207	70041472	Cap, Chip	1nF	K 50V
CN208	70041472	Cap, Chip	1nF	K 50V
CN209	70041472	Cap, Chip	1nF	K 50V
CN210	70042132	Cap, Chip	560pF	K
CN211	70041472	Cap, Chip	1nF	K 50V
CN215	24093962	Cap, Variable	20pF	
CN216	70041274	Cap, Chip	27pF	
CN217	70041485	Cap, Chip	2pF	C
CN218	70041485	Cap, Chip	2pF	C
CN219	70041497	Cap, Chip	56pF	J 50V
CN220	70041497	Cap, Chip	56pF	J 50V
CN221	70041497	Cap, Chip	56pF	J 50V
CN222	24203100	Cap, Electrolytic	10μF	M 16V
CN223	70041472	Cap, Chip	1nF	K 50V
CN225	70041529	Cap, Chip	1μF	Z 16V
CN226	70042380	Cap	100nF	Z
CN228	24203100	Cap, Electrolytic	10μF	M 16V
CN229	70041130	Cap, Chip	470nF	Z 16V
CN230	70041130	Cap, Chip	470nF	Z 16V
CN231	70041130	Cap, Chip	470nF	Z 16V
CN232	70041130	Cap, Chip	470nF	Z 16V
CN233	70041529	Cap, Chip	1μF	Z 16V
CN234	70041529	Cap, Chip	1μF	Z 16V
CN237	70042380	Cap	100nF	Z
CN238	24206339	Cap, Electrolytic	3.3μF	M 50V
CN239	70041472	Cap, Chip	1nF	K 50V
CN240	70042380	Cap	100nF	Z
CN242	70041130	Cap, Chip	470nF	Z 16V
CN243	70041042	Cap, Electrolytic	10μF	X
CN244	70040530	Cap, Electrolytic	100μF	M 16V
CN245	70041130	Cap, Chip	470nF	Z 16V
CN246	24781330	Cap, Chip	33pF	J 50V
CN248	24781330	Cap, Chip	33pF	J 50V
CN253	24781330	Cap, Chip	33pF	J 50V
CN254	24203100	Cap, Electrolytic	10μF	M 16V
CN255	24203100	Cap, Electrolytic	10μF	M 16V
CN257	24781330	Cap, Chip	33pF	J 50V
CN260	24203100	Cap, Electrolytic	10μF	M 16V
CN261	24203100	Cap, Electrolytic	10μF	M 16V
CX001	70041472	Cap, Chip	1nF	K 50V
CX002	70041472	Cap, Chip	1nF	K 50V
CX003	70040262	Cap, Chip	100pF	J 50V
CX004	70042132	Cap, Chip	560pF	K
CX005	70040262	Cap, Chip	100pF	J 50V

LOCATION NUMBER	PART NUMBER	DESCRIPTION		
CX006	70042132	Cap, Chip	560pF	K
CX007	70041472	Cap, Chip	1nF	K 50V
CX008	70041472	Cap, Chip	1nF	K 50V
CX009	70040262	Cap, Chip	100pF	J 50V
CX010	70042132	Cap, Chip	560pF	K
CX011	70040262	Cap, Chip	100pF	J 50V
CX012	70042132	Cap, Chip	560pF	K
CX102	70042380	Cap	100nF	Z
CX103	70041051	Cap, Electrolytic	47μF	M 16V
CX105	70042380	Cap	100nF	Z
CX106	70042380	Cap	100nF	Z
CX107	70041051	Cap, Electrolytic	47μF	M 16V
CX108	70042380	Cap	100nF	Z
CX109	70042380	Cap	100nF	Z
CX110	70042380	Cap	100nF	Z
CX111	70042380	Cap	100nF	Z
CX112	70040262	Cap, Chip	100pF	J 50V
CX113	70040241	Cap, Chip	47pF	J 50V
CX114	70042380	Cap	100nF	Z
CX123	70040262	Cap, Chip	100pF	J 50V
		- RESISTORS -		
CN247	70040348	Res, Chip	100Ω	J 1/16W
CN250	70040348	Res, Chip	100Ω	J 1/16W
CN252	70040348	Res, Chip	100Ω	J 1/16W
CN256	70040348	Res, Chip	100Ω	J 1/16W
RN101	70040570	Res, Chip	470Ω	J 1/16W
RN102	70040570	Res, Chip	470Ω	J 1/16W
RN103	70040361	Res, Chip	27kΩ	J 1/16W
RN104	70040362	Res, Chip	33kΩ	J 1/16W
RN105	70040361	Res, Chip	27kΩ	J 1/16W
RN106	70040362	Res, Chip	33kΩ	J 1/16W
RN107	70040361	Res, Chip	27kΩ	J 1/16W
RN109	70041694	Res, Chip	7.5kΩ	J 1/16W
RN110	70040361	Res, Chip	27kΩ	J 1/16W
RN112	70041694	Res, Chip	7.5kΩ	J 1/16W
RN116	70041199	Res, Chip	1MΩ	J 1/10W
RN120	70040493	Cap, Chip	10nF	K 50V
RN121	70040362	Res, Chip	33kΩ	J 1/16W
RN122	70040363	Res, Chip	47kΩ	J 1/16W
RN123	70040362	Res, Chip	33kΩ	J 1/16W
RN125	70041464	Res, Chip	150Ω	J 1/10W
RN126	70041380	Res, Chip	300Ω	J 1/16W
RN127	70040335	Res, Chip	2.7kΩ	J 1/16W
RN128	70042188	Res, Chip	620Ω	J 1/8W
RN129	70040565	Res, Chip	2.7kΩ	J 1/8W
RN131	70040348	Res, Chip	100Ω	J 1/16W
RN137	70040391	Chip Jumper		
RN138	70040354	Res, Chip	1kΩ	J 1/16W
RN139	70041199	Res, Chip	1MΩ	J 1/10W
RN141	70041173	Res, Chip	100kΩ	J 1/10W
RN142	70040373	Res, Chip	4.7kΩ	J 1/16W
RN144	70040358	Res, Chip	10kΩ	J 1/16W
RN145	70041173	Res, Chip	100kΩ	J 1/10W
RN146	24872162	Res, Chip	1.6kΩ	J 1/16W
RN150	70040358	Res, Chip	10kΩ	J 1/16W
RN151	70040354	Res, Chip	1kΩ	J 1/16W
RN152	70040358	Res, Chip	10kΩ	J 1/16W
RN154	70040391	Chip Jumper		
RN201	70040348	Res, Chip	100Ω	J 1/16W
RN202	70040339	Res, Chip	330Ω	J 1/16W
RN203	70040350	Res, Chip	220Ω	J 1/16W
RN205	70040571	Res, Chip	12kΩ	J 1/16W
RN206	70040391	Chip Jumper		
RN208	70040361	Res, Chip	27kΩ	J 1/16W
RN209	70040372	Res, Chip	3.3kΩ	J 1/16W
RN210	70040372	Res, Chip	3.3kΩ	J 1/16W
RN211	70040372	Res, Chip	3.3kΩ	J 1/16W
RN212	70040372	Res, Chip	3.3kΩ	J 1/16W
RN213	70040354	Res, Chip	1kΩ	J 1/16W
RN214	70040391	Chip Jumper		
RN216	70041464	Res, Chip	150Ω	J 1/10W
RN217	70040354	Res, Chip	1kΩ	J 1/16W
RN218	70040354	Res, Chip	1kΩ	J 1/16W
RN220	70040357	Res, Chip	22kΩ	J 1/16W
RN221	70041694	Res, Chip	7.5kΩ	J 1/16W

LOCATION NUMBER	PART NUMBER	DESCRIPTION		
RN223	70040571	Res, Chip	12kΩ	J 1/16W
RN224	70041712	Res, Chip	9.1kΩ	J 1/10W
RN225	70040571	Res, Chip	12kΩ	J 1/16W
RN226	70041712	Res, Chip	9.1kΩ	J 1/10W
RN227	70040571	Res, Chip	12kΩ	J 1/16W
RN228	70041712	Res, Chip	9.1kΩ	J 1/10W
RN229	70040571	Res, Chip	12kΩ	J 1/16W
RN230	70041712	Res, Chip	9.1kΩ	J 1/10W
RN231	70040571	Res, Chip	12kΩ	J 1/16W
RN232	70041712	Res, Chip	9.1kΩ	J 1/10W
RN233	70040571	Res, Chip	12kΩ	J 1/16W
RN234	70041712	Res, Chip	9.1kΩ	J 1/10W
RN235	70040363	Res, Chip	47kΩ	J 1/16W
RN236	70040363	Res, Chip	47kΩ	J 1/16W
RN239	70040348	Res, Chip	100Ω	J 1/16W
RN242	70040348	Res, Chip	100Ω	J 1/16W
RN243	70040363	Res, Chip	47kΩ	J 1/16W
RN244	70040363	Res, Chip	47kΩ	J 1/16W
RN245	70040363	Res, Chip	47kΩ	J 1/16W
RN246	70040363	Res, Chip	47kΩ	J 1/16W
RN247	70040391	Chip Jumper		
RN249	70040348	Res, Chip	100Ω	J 1/16W
RN251	70042188	Res, Chip	620Ω	J 1/8W
RN252	70040348	Res, Chip	100Ω	J 1/16W
RN253	70040363	Res, Chip	47kΩ	J 1/16W
RN254	70040363	Res, Chip	47kΩ	J 1/16W
RN255	70040391	Chip Jumper		
RN256	70042188	Res, Chip	620Ω	J 1/8W
RN261	70040391	Chip Jumper		
RN262	70040358	Res, Chip	10kΩ	J 1/16W
RN263	70040358	Res, Chip	10kΩ	J 1/16W
RN264	70040358	Res, Chip	10kΩ	J 1/16W
RN265	70040358	Res, Chip	10kΩ	J 1/16W
RX001	70040333	Res, Chip	100Ω	J 1/8W
RX002	70040348	Res, Chip	100Ω	J 1/16W
RX003	70040348	Res, Chip	100Ω	J 1/16W
RX004	70040348	Res, Chip	100Ω	J 1/16W
RX005	70040348	Res, Chip	100Ω	J 1/16W
RX006	70040348	Res, Chip	100Ω	J 1/16W
RX007	70040348	Res, Chip	100Ω	J 1/16W
RX008	70040348	Res, Chip	100Ω	J 1/16W
RX009	70040348	Res, Chip	100Ω	J 1/16W
RX010	70040348	Res, Chip	100Ω	J 1/16W
RX011	70040348	Res, Chip	100Ω	J 1/16W
RX012	70040348	Res, Chip	100Ω	J 1/16W
RX101	70041441	Res, Chip	75Ω	J 1/10W
RX102	70041441	Res, Chip	75Ω	J 1/10W
RX103	70041441	Res, Chip	75Ω	J 1/10W
RX104	70041441	Res, Chip	75Ω	J 1/10W
RX110	70040348	Res, Chip	100Ω	J 1/16W
RX111	70040348	Res, Chip	100Ω	J 1/16W
RX113	70040336	Res, Chip	68kΩ	J 1/16W
RX114	70040354	Res, Chip	1kΩ	J 1/16W
RX115	70040358	Res, Chip	10kΩ	J 1/16W
RX906	70040391	Chip Jumper		
RX907	70040391	Chip Jumper		
RX910	70040391	Chip Jumper		
JN201	70040391	Chip Jumper		
JN203	70040391	Chip Jumper		
JN205	70040391	Chip Jumper		
		- MISCELLANEOUS -		
BN103	70060759	Phono Jack		
BN104	70012358	Phono Jack		
BX101	70010209	Scart 21P		
BX102	70012102	Scart 21P		
QN201	70012642	Crystal	18.432MHz	
■0210M	70095272	P C Board Assy	KDB	
		- INTEGRATED CIRCUITS -		
IK01	70012925	IC	TMP87CP71F-6699	
		- TRANSISTORS -		
TK01	A6325549	Transistor	2SC2236-Y	
TK02	A6004010	Transistor, Chip	RN1401	
TK03	A6335580	Transistor, Chip	2SC2714-Y	
TK04	A6004020	Transistor, Chip	RN1402	

LOCATION NUMBER	PART NUMBER	DESCRIPTION		
		- DIODES -		
DK01	70011969	Diode, Zener	ZMM5.6V	
DK02	70010341	Diode	1SS226	
GK02	70012924	Diode, LED	TLN110	
GK03	70012924	Diode, LED	TLN110	
GK04	70012924	Diode, LED	TLN110	
		- CAPACITORS -		
CK01	24814223	Cap, Chip	2200pF	Z 50V
CK02	70040040	Cap	10nF	M 25V
CK03	70041103	Cap, Chip	33pF	J 50V
CK04	70041103	Cap, Chip	33pF	J 50V
CK05	70041376	Cap, Chip	10nF	Z 50V
CK06	70040647	Cap, Electrolytic	47μF	M 10V
CK07	70040040	Cap	10nF	M 25V
CK08	70041292	Cap, Electrolytic	100μF	M 6.3V
CK09	70041376	Cap, Chip	10nF	Z 50V
CK10	70040243	Cap, Chip	82pF	J 50V
		- RESISTORS -		
RK01	70041168	Res, Chip	15Ω	J 1/10W
RK02	70041168	Res, Chip	15Ω	J 1/10W
RK03	70040358	Res, Chip	10kΩ	J 1/16W
RK04	70040373	Res, Chip	4.7kΩ	J 1/16W
RK05	70041709	Res, Chip	2.2kΩ	G 1/10W
RK06	70040358	Res, Chip	10kΩ	J 1/16W
RK07	70040350	Res, Chip	220Ω	J 1/16W
RK08	70040358	Res, Chip	10kΩ	J 1/16W
RK09	70040358	Res, Chip	10kΩ	J 1/16W
RK10	70040350	Res, Chip	220Ω	J 1/16W
RK103	70040391	Chip Jumper		
RK105	70040391	Chip Jumper		
RK109	70040391	Chip Jumper		
RK11	70011425	Res, Chip	3kΩ	
RK12	70011425	Res, Chip	3kΩ	
RK13	70011425	Res, Chip	3kΩ	
RK14	70011425	Res, Chip	3kΩ	
RK15	70011425	Res, Chip	3kΩ	
RK16	70040354	Res, Chip	1kΩ	J 1/16W
RK19	70040354	Res, Chip	1kΩ	J 1/16W
RK20	70011426	Res, Chip	2kΩ	
RK21	70042392	Res, Chip	6.2kΩ	J 1/4W
RK22	70040354	Res, Chip	1kΩ	J 1/16W
RK23	70040374	Res, Chip	8.2kΩ	J 1/16W
RK24	70041138	Res, Chip	5.6kΩ	J 1/10W
RK26	70040340	Res, Chip	47Ω	J 1/16W
RK27	70041352	Res, Chip	4.7kΩ	J 1/8W
RK28	70041384	Res, Chip	1.2kΩ	J 1/8W
RK61	70041385	Res, Chip	27kΩ	J 1/8W
RK62	70040350	Res, Chip	220Ω	J 1/16W
RK63	70040358	Res, Chip	10kΩ	J 1/16W
RK64	70040361	Res, Chip	27kΩ	J 1/16W
		- MISCELLANEOUS -		
GK01	70012522	FIP	6-MT-255GNAK	
QK01	70010937	Resonator	8MHz	
SK06	70031729	Switch		
SK08	70031729	Switch		
SK10	70031729	Switch		
SK13	70031729	Switch		
SK14	70031729	Switch		
ZK01	70012418	F.U.	GP1U281X	
■0212M	70095273	P C Board Assy	FCB	
		- TRANSISTORS -		
TK06	A6004020	Transistor, Chip	RN1402	
TK07	A6004020	Transistor, Chip	RN1402	
TK08	A6004020	Transistor, Chip	RN1402	
		- DIODES -		
DK14	70052221	Diode, LED	LTL-10CHJ	
		- RESISTORS -		
RK17	70041712	Res, Chip	9.1kΩ	J 1/10W
RK18	70040354	Res, Chip	1kΩ	J 1/16W
RK66	70040350	Res, Chip	220Ω	J 1/16W
RK67	70040373	Res, Chip	4.7kΩ	J 1/16W
RK68	70040350	Res, Chip	220Ω	J 1/16W
RK69	70040373	Res, Chip	4.7kΩ	J 1/16W
		- MISCELLANEOUS -		

LOCATION NUMBER	PART NUMBER	DESCRIPTION
SK03	70031729	Switch
SK04	70031729	Switch
SK07	70031729	Switch
SK16	70031729	Switch

LOCATION NUMBER	PART NUMBER	DESCRIPTION

SPECIFICATIONS

SYSTEM

Format	:	VHS standard
Recording system	:	Rotary, 2-head helical scan system
Video heads	:	4 heads
Video signal system	:	CCIR; 625 lines, 50 fields, PAL colour signal, NTSC colour, 525 lines
Tape speed	:	SP : 23.39 mm/s (PAL) SP : 33.35 mm/s (NTSC)
		LP : 11.70 mm/s (PAL) SLP : 11.12 mm/s (NTSC)
Recording time	:	SP : 240 minutes with E240 cassettes (PAL), LP : 480 minutes with E240 cassettes (PAL)
Winding time	:	Approx. 110 seconds with E180 cassettes
Dimensions	:	370 (W) × 89 (H) × 309.4 (D) mm
Mass	:	3.9 kg
Operating temperature	:	+5 to +40°C
Operating humidity	:	Less than 80% RH
Mains power	:	230/240 V AC, 50 Hz
Power consumption	:	19 W (in operation)

CONNECTORS

Aerial input	:	75 Ω coaxial
Aerial output	:	75 Ω coaxial
Video input	:	AUDIO/VIDEO SCART socket, 1.0 V(p-p), 75 Ω
Audio input	:	AUDIO/VIDEO SCART socket, 308 mV(rms), more than 10 kΩ
Video output	:	AUDIO/VIDEO SCART socket, 1.0 V(p-p), 75 Ω
Audio output	:	AUDIO/VIDEO SCART socket, 308 mV(rms), less than 1.0 kΩ
		AUDIO OUT Phono type jacks, 308 mV(rms), less than 4.7 kΩ

VIDEO

Signal-to-noise ratio	:	More than 43 dB (SP tape speed/PAL)

AUDIO

Signal-to-noise ratio	:	More than 42 dB (SP tape speed/PAL/normal mono)
Frequency range	:	20 Hz to 20 kHz (Hi-Fi mode)
Dynamic range	:	More than 90 dB (Hi-Fi mode)
Audio track	:	1 track (Normal-mono), 2 channels (Hi-Fi sound)

TIMER

Clock	:	24-hour digital indication
No. of events	:	6 events 1 month

TUNER

System	:	Frequency synthesizer
Channel coverage	:	PAL I VHF: A – J, 11, 13, E2 – E12 UHF: E21 – E69
		CATV: X, Y, Z, S1 – S41, 1 – 53 (48MHz to 464MHz, 8MHz steps)
Stereo	:	NICAM-I
RF converter	:	UHF channel 21 – 69, adjustable, System-I

ACCESSORIES

Aerial cable...1 Remote controller...1 Batteries (R03)...2 Power cord...1

Designs and specifications are subject to change without notice.

TOSHIBA VIDEO PRODUCTS PTE. LTD.
456 ALEXANDRA ROAD, #07-01/02 NOL BUILDING SINGAPORE 119962